COOLING TECHNOLOGY SOLUTIONS

Condensing units

www.jdk.cz

Contents

General characteristics 5

System of designation 6

Specifications 7

Optional accessories 8

Unit design 9

Capacities 11

Units with hermetic piston compressors Danfoss - line D 12
R404A ... 12
Units with hermetic piston compressors Electrolux - line E 13
R404A ... 13
Units with hermetic piston compressors Maneurop - line M 14
R404A ... 14
Units with hermetic scroll compressors Maneurop - line SM 15
R404A ... 15
Units with hermetic scroll compressors Copeland - line ZR 16
R404A ... 16
R407C ... 19
R134a ... 22
Units with hermetic scroll compressors Copeland - line ZB 24
R404A ... 24
Units with hermetic scroll compressors Copeland - line ZF 26
R404A ... 26
Units with semihermetic piston compressors Copeland - line CP (JLE) 27
R404A ... 27
Units with semihermetic piston compressors Copeland - line CP (JME) 29
R404A ... 29
Units with semihermetic piston compressors Bitzer - line BP 31
R404A ... 31
Units with hermetic scroll compressors Bitzer - line ESH 33
R404A ... 33

Technical data 34

Units with hermetic piston compressors Danfoss - line D 35
Units with hermetic piston compressors Electrolux - line E 37
Units with hermetic piston compressors Maneurop - line M 39
Units with hermetic scroll compressors Maneurop - line SM 41
Units with hermetic scroll compressors Copeland - line ZR 43
Units with hermetic scroll compressors Copeland - line ZB 47
Units with hermetic scroll compressors Copeland - line ZF 49
Units with semihermetic piston compressors Copeland - line CP (JLE) 51
Units with semihermetic piston compressors Copeland - line CP (JME) 53
Units with semihermetic piston compressors Bitzer - line BP 55
Units with hermetic scroll compressors Bitzer - line ESH 57

General characteristics

Condensing units are traditional products of JDK. The company is committed to high quality and reliability guaranteed by well organized production and components from renowned manufacturers.

Classification of condensing units

Classification by compressor manufacturer and type:

- **Danfoss** - hermetic
- **Electrolux** - hermetic
- **Maneurop** - hermetic, scroll
- **Copeland** - scroll, semihermetic
- **Bitzer** – semihermetic

Classification by operating temperature ranges for which the units are designed:

- **High temperatures** – air-conditioning range
  e.g. processing plants and different food producing plants +12°C to +15°C or for air-handling units
- **Medium temperatures** – cool storage (frozen food storage) range
  e.g. food stores ranging from -2°C to +8°C, or frozen-food stores up to -18°C
- **Low temperatures** – frozen food storage range
  e.g. frozen-food stores -18°C to -25°C, or freezing plants up to -35°C

Note: In most cases, one type of unit covers two ranges. For instance, one unit is suitable for medium and high temperatures.

Advantages

- Simple design
- Wide range of applications
- Easy installation and maintenance
- High efficiency and reliability
- Environmentally-friendly solution
- Simple control
- Simplex cooling circuit
- Uses both HFC refrigerants

System of designation

J M E - M - 18 . 07
1 2 3 4 5 6

1 Condensing unit

2 Operating range
H - high temperatures, bigger condenser
- application: e.g. food processors +12°C to +15°C, air-conditioning units
M - medium temperatures
- application: e.g. cool storage +4°C to -2°C, frozen-food storage up to -18°C
L - low temperatures
- application: e.g. frozen-food storage -18°C to -25°C, or freezing plants up to -35°C

3 Oil used
E - ester
M - mineral

4 Type of compressor
D - Danfoss hermetic
E - Electrolux hermetic
M - Maneurop hermetic
SM - Maneurop Scroll
ZR - Copeland Scroll
ZB - Copeland Scroll
ZF - Copeland Scroll
CP - Copeland semihermetic
S - Copeland semihermetic
BP - Bitzer semihermetic

5 Model size

6 Supplementary data on unit accessories and power supply
05 - with one pressure switch controlling the condenser fans
06 - with two pressure switches controlling the condenser fans
07 - with variable condenser fan speed control (only for 1 phase fans)
08 - with separate condenser
10 - with a smaller condenser
99 - other special requirements

Specifications

Compressor

Maneurop
hermetic

Copeland
scroll

Copeland
semihermetic

Bitzer
semihermetic

Flexible connector on discharge piping with semihermetic Copeland compressors as standard

Flexible mounting of semihermetic compressors

Electronic differential oil pressure switch for compressors with oil pumps

Discharge thermostat for refrigeration scroll compressors

Liquid injection for freezing scroll compressors

Standard accessories:

- Thermal coil protection
- Discharge and suction rotalock valve
- Electric crankcase heater
- Primary oil filling

Air condenser

For ambient temperatures up to +43°C

High-performance heat transfer surface

Corrugated aluminium lamellas

Copper pipes with inner grooves

Propeller fans

- large air quantities at low static pressure
- noiseless operation
- specially integrated with motor and wire cage

Liquid receiver

80% of the volume for refrigerant

Maximum permissible working pressure is 28 bar

Rotalock valve on the outlet

Liquid filter-dryer

Enclosed with the unit (not installed)

Electric box with terminal board

Electric components in the unit connected to the electric box

Wiring diagram attached to the cover backside

Protective low- and high-pressure combined switch

Automatic reset on both sides

Unit frame

Lacquered

Bent zinc-coated sheet or welded iron sections

Documentation

Installation, commissioning, operation and maintenance instructions

Pressure vessel passport

Certificate of product quality and completeness with initial electric inspection

Optional accessories

Condensing pressure control

Speed controller for 1-ph. fans

Pressure switch turning condenser fan on/off

Liquid piping accessories

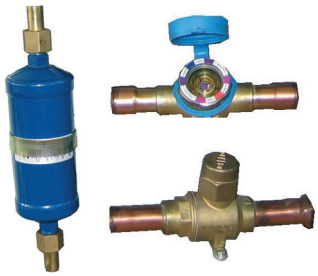

Liquid filter-dryer and sight glass terminated with a soldered plug

Liquid filter-dryer, sight glass and solenoid terminated with a soldered plug

Piping terminated with a ball valve

Liquid filter-dryer with replaceable cartridge

Larger liquid receiver

Unit discharge accessories

Oil separator and non-return valve

Suction piping accessories

15cm pipe terminated with a soldered plug

Suction filter, pipe terminated with a soldered plug

Suction accumulator, suction filter, pipe terminated with a soldered plug

Pipe terminated with ball valve

Outdoor use case

Made of zinc-coated lacquered sheet

Unit design

1. Calculating the necessary refrigerating capacity

To calculate the refrigerating capacity, we recommend:

1) Using the JDK Bilance software that allows defining all the parameters necessary for calculation according to the individual specifications and individual needs (dimensions of the refrigerated space, individual insulations, outside temperatures, quantity of goods and the necessary cooling and various other thermal loads).

2) Using guiding tables according to the volume or dimensions of refrigerated space with defined typical load estimates.

2. Set the evaporating temperature

Set the evaporating temperature for the given temperature in the space, taking into account:

- Δt at the evaporator
- unit distances from the evaporator (pressure loss in piping)

3. Set the ambient temperature

For the Czech Republic, we choose +32°C as standard, but we have to take into account the place where the unit is to be located. For instance, on the south side or in places with impaired access of fresh air (machine rooms etc.), you have to allow for higher ambient temperatures and ensure air ventilation.

4. Selecting the unit

Select the type of your unit according to the chosen ambient temperature, planned evaporating temperature and necessary refrigerating capacity.

5. Choosing unit accessories

Consider the accessories suitable for the selected unit.

Example – The condensing unit is located outdoors:

1) Select accessories for condensing pressure control:

- condenser fan speed controller
- one or two pressure switches to turn compressors on/off

2) Choose the outdoor use case

3) Consider accessories facilitating the condensing unit installation, i.e.:

- liquid piping accessories
- suction piping accessories

For special applications, it may be necessary to consider other condensing unit accessories, e.g. a oil separator, or we recommend consulting technical issues with JDK, where we can propose other special accessories.

Capacities

Temperature applications: low medium high

R404A

Model		t_{ll} \ t_e	-30	-25	-20	-15	-10	-5	0	5	7	10	12,5	15
JHE-D-05	Q	27			570	700	850	1 030	1 220					
		32			520	640	780	940	1 120					
		38			460	570	700	840	990					
	P	27			0,36	0,4	0,45	0,49	0,53					
		32			0,36	0,41	0,46	0,51	0,56					
		38			0,36	0,42	0,48	0,53	0,59					
JHE-D-07	Q	27			710	880	1 070	1 270	1 480					
		32			650	810	980	1 160	1 360					
		38			560	710	870	1 030	1 200					
	P	27			0,49	0,55	0,61	0,67	0,73					
		32			0,49	0,56	0,63	0,7	0,77					
		38			0,49	0,58	0,66	0,74	0,81					
JHE-D-09	Q	27			840	1 030	1 250	1 490	1 770					
		32			770	950	1 150	1 380	1 620					
		38			680	850	1 030	1 230	1 450					
	P	27			0,55	0,6	0,66	0,72	0,78					
		32			0,56	0,62	0,69	0,75	0,82					
		38			0,57	0,65	0,72	0,79	0,87					

Temperature applications: low medium high

R404A

Model		t_{ll} \ t_e	-50	-45	-40	-35	-30	-25	-20	-15	-10	-5	0	5
JME-D-10	Q	27		240	370	520	660	820	970	1 120	1 280	1 440		
		32		230	340	460	590	720	850	990	1 140	1 290		
		38		190	280	370	480	590	720	850	990			
	P	27		0,36	0,4	0,45	0,51	0,59	0,68	0,79	0,91	1,05		
		32		0,34	0,39	0,45	0,52	0,6	0,7	0,82	0,95	1,09		
		38		0,33	0,38	0,45	0,53	0,62	0,73	0,85	0,97			

Q [W] = Cooling Capacity[1)]
P [kW] = Power Input[1)]
[1)] Parameters based on suction return temperature 32°C and liquid subcooling 0 K
t_e [°C] = Evaporating Temperature
t_{ll} [°C] = Ambient Temperature

Temperature applications: low medium high

R404A

Model		t_{11} \ t_e	-30	-25	-20	-15	-10	-5	0	5	7	10	12,5	15
JME-E-13	Q	27		890	1 130	1 380	1 630	1 890	2 130					
		32		800	1 020	1 240	1 470	1 690						
		38			880	1 070	1 260							
	P	27		0,67	0,75	0,85	0,95	1,07	1,21					
		32		0,67	0,76	0,87	0,98	1,11						
		38			0,77	0,89	1,02							
JHE-E-13	Q	27		970	1 260	1 570	1 890	2 220	2 560	2 900				
		32		880	1 140	1 420	1 710	2 010	2 320	2 640				
		38		770	990	1 240	1 490	1 760	2 040					
	P	27		0,67	0,74	0,82	0,91	1,01	1,12	1,24				
		32		0,67	0,75	0,84	0,94	1,05	1,17	1,3				
		38		0,67	0,76	0,87	0,98	1,1	1,23					
JME-E-15	Q	27		1 180	1 490	1 810	2 140	2 480	2 820	3 160				
		32		1 040	1 330	1 620	1 920	2 230	2 540	2 850				
		38		880	1 130	1 390	1 650	1 920						
	P	27		0,82	0,91	1,02	1,14	1,27	1,42	1,58				
		32		0,8	0,91	1,03	1,16	1,31	1,47	1,64				
		38		0,78	0,91	1,04	1,19	1,35						
JHE-E-15	Q	27		1 310	1 680	2 070	2 490	2 920	3 370	3 840				
		32		1 170	1 510	1 870	2 250	2 650	3 070	3 500				
		38		1 000	1 300	1 620	1 960	2 330	2 710	3 100				
	P	27		0,83	0,92	1,01	1,11	1,22	1,33	1,46				
		32		0,82	0,91	1,02	1,13	1,25	1,38	1,52				
		38		0,79	0,91	1,03	1,16	1,29	1,44	1,6				

Q [W] = Cooling Capacity[1)]
P [kW] = Power Input[1)]
[1)] Parameters based on suction return temperature 32°C and liquid subcooling 0 K
t_e [°C] = Evaporating Temperature
t_{11} [°C] = Ambient Temperature
(Q) = Maximum suction superheat 11,1 K

Temperature applications: low medium high

R404A

Model		t_{11} \ t_e	-30	-25	-20	-15	-10	-5	0	5	7	10	12,5	15
JME-M-18E	Q	27	830	1 120	1 500	1 950	2 470	3 070	3 730	4 450	4 740	5 200		
		32	(660)	940	1 300	1 720	2 210	2 750	3 350	4 000	4 260	4 670		
		38	(490)	760	1 080	1 460	1 890	2 370	2 890	3 440	3 670	4 010		
	P	27	0,71	0,82	0,94	1,05	1,16	1,26	1,37	1,48	1,53	1,60		
		32	0,73	0,85	0,96	1,08	1,19	1,31	1,43	1,56	1,61	1,70		
		38	0,74	0,86	0,98	1,10	1,23	1,36	1,49	1,64	1,70	1,80		
JME-M-18	Q	27	830	1 120	1 500	1 950	2 470	3 070	3 730	4 450	4 740	5 200		
		32	(660)	940	1 300	1 720	2 210	2 750	3 350	4 000	4 260	4 670		
		38	(490)	760	1 080	1 460	1 890	2 370	2 890	3 440	3 670	4 010		
	P	27	0,71	0,82	0,94	1,05	1,16	1,26	1,37	1,48	1,53	1,60		
		32	0,73	0,85	0,96	1,08	1,19	1,31	1,43	1,56	1,61	1,70		
		38	0,74	0,86	0,98	1,10	1,23	1,36	1,49	1,64	1,70	1,80		
JME-M-28	Q	27	(1 510)	1 990	2 550	3 200	3 920	4 710	5 530	6 370	6 710	7 220		
		32	(1 290)	1 750	2 280	2 880	3 540	4 240	4 970	5 710	6 000	6 430		
		38	(1 050)	1 480	1 970	2 500	3 070	3 670	4 270					
	P	27	1,07	1,29	1,51	1,72	1,94	2,16	2,38	2,62	2,71	2,86		
		32	1,08	1,30	1,52	1,75	1,98	2,22	2,47	2,72	2,83	3,00		
		38	1,07	1,29	1,52	1,76	2,01	2,28	2,56					
JME-M-40	Q	27	2 070	2 800	3 660	4 630	5 680	6 810	7 960	9 110	9 570	10 230		
		32	(1 780)	2 490	3 300	4 200	5 160	6 170	7 190	8 190				
		38	(1 480)	(2 150)	2 880	3 680	4 520	5 380	6 220					
	P	27	1,66	1,97	2,29	2,63	2,98	3,35	3,74	4,16	4,34	4,61		
		32	1,70	2,01	2,34	2,69	3,06	3,45	3,87	4,31				
		38	1,73	2,05	2,39	2,75	3,14	3,56	4,01					
JME-M-64	Q	27	3 670	4 890	6 350	8 030	9 920	11 970	14 150	16 410	17 320	18 690		
		32	(3 100)	4 290	5 680	7 260	9 000	10 880	12 850	14 870	15 680	16 880		
		38	(2 530)	(3 650)	4 940	6 370	7 920	9 570	11 260	12 970				
	P	27	2,61	3,05	3,51	3,97	4,44	4,92	5,43	5,96	6,18	6,52		
		32	2,70	3,14	3,61	4,09	4,59	5,10	5,65	6,23	6,47	6,85		
		38	2,76	3,22	3,70	4,21	4,74	5,31	5,91	6,55				
JME-M-80	Q	27	(4 760)	6 290	8 080	10 090	12 300	14 650	17 100	19 570	20 550	22 000		
		32	(4 030)	5 510	7 220	9 110	11 150	13 290	15 490	17 680	18 530	19 790		
		38	(3 250)	(4 660)	6 240	7 960	9 780	11 660	13 540					
	P	27	3,49	4,03	4,59	5,18	5,81	6,46	7,17	7,93	8,26	8,77		
		32	3,57	4,12	4,70	5,31	5,97	6,67	7,43	8,26	8,61	9,16		
		38	3,63	4,19	4,80	5,45	6,15	6,91	7,74					
JME-M-100	Q	27	5 470	7 220	9 350	11 840	14 670	17 790	21 130	24 630	26 050	28 190		
		32	(4 690)	6 370	8 370	10 680	13 270	16 100	19 100	22 210	23 460	25 330		
		38	(3 860)	(5 420)	7 240	9 300	11 570	14 010	16 570	19 160				
	P	27	4,09	4,73	5,37	6,02	6,67	7,34	8,02	8,73	9,02	9,48		
		32	4,24	4,88	5,54	6,21	6,90	7,61	8,35	9,13	9,45	9,96		
		38	4,34	4,99	5,67	6,38	7,12	7,89	8,71	9,57				
JME-M-125	Q	27	(7 390)	9 540	12 120	15 080	18 390	21 960	25 720	29 550	31 080	33 340		
		32	(6 380)	8 460	10 880	13 630	16 640	19 870	23 200	26 560	27 880	29 820		
		38	(5 320)	(7 260)	9 460	11 910	14 550	17 320	20 130					
	P	27	5,15	5,93	6,74	7,58	8,45	9,37	10,35	11,40	11,84	12,54		
		32	5,33	6,12	6,94	7,82	8,74	9,71	10,76	11,90	12,38	13,14		
		38	5,48	6,28	7,14	8,06	9,04	10,10	11,24					

Q [W] = Cooling Capacity[1)]
P [kW] = Power Input[1)]
[1)] Parameters based on suction superheat 11,1 K and liquid subcooling 8,3 K
t_e [°C] = Evaporating Temperature
t_{11} [°C] = Ambient Temperature
(Q) = Maximum suction superheat 11,1 K

Temperature applications: low medium high

R404A

Model		t_{11} \ t_e	-30	-25	-20	-15	-10	-5	0	5	7	10	12,5	15
JME-SM-125	Q	27			11 343	13 820	16 627	19 736	23 133	26 772	28 329	30 573		
		32				12 416	14 977	17 800	20 879	24 161	25 574	27 592		
		38						15 337	18 022	20 864	22 108	23 853		
	P	27			5,71	5,93	6,18	6,48	8,76	9,27	9,47	9,82		
		32				6,59	6,87	7,18	9,71	10,25	10,46	10,82		
		38						8,13	10,99	11,54	11,76	12,12		
JHE-SM-125	Q	27			12 428	15 254	18 545	22 297	26 519	31 203	33 263	36 290		
		32			11 264	13 915	16 982	20 468	24 384	28 720	30 627	33 425		
		38			9 799	12 215	14 984	18 121	21 643	25 531	27 248	29 754		
	P	27			5,18	5,30	5,45	5,61	7,42	7,72	7,85	8,06		
		32			5,75	5,88	6,04	6,22	8,25	8,57	8,69	8,91		
		38			6,54	6,69	6,86	7,06	9,38	9,73	9,85	10,09		
JME-SM-185	Q	27			17 836	21 936	26 682	32 064	38 084	44 696	47 601	51 840		
		32				20 078	24 460	29 406	34 941	41 005	43 680	47 561		
		38					21 637	26 021	30 939	36 312	38 698	42 130		
	P	27			10,40	10,66	10,97	11,33	11,75	12,23	12,46	12,79		
		32				11,70	12,03	12,42	12,86	13,36	13,60	13,94		
		38					13,48	13,89	14,35	14,88	15,12	15,48		
JHE-SM-185	Q	27			18 570	22 945	28 074	33 982	40 687	48 193	51 532	56 458		
		32			17 044	21 136	25 916	31 403	37 631	44 590	47 695	52 258		
		38				18 859	23 182	28 124	33 745	40 013	42 823	46 931		
	P	27			9,96	10,13	10,34	10,59	10,88	11,22	11,38	11,61		
		32			10,90	11,10	11,33	11,60	11,90	12,26	12,43	12,68		
		38				12,43	12,68	12,97	13,30	13,68	13,85	14,11		
JME-SM-250	Q	27			24 372	29 932	36 333	43 579	51 730	60 706	64 629	70 383		
		32				27 233	33 179	39 884	47 417	55 691	59 311	64 605		
		38						35 145	41 881	49 249	52 490	57 197		
	P	27			11,35	14,43	14,87	15,13	15,74	15,97	16,29	16,76		
		32				16,07	16,53	16,85	17,50	17,70	18,04	18,53		
		38						19,21	19,90	20,07	20,43	20,95		
JME-SM-370	Q	27			34 988	42 961	52 144	62 491	74 002	86 559	92 052	100 029		
		32				39 224	47 666	57 129	67 664	79 121	84 155	91 418		
		38					41 966	50 286	59 576	69 641	74 098	80 459		
	P	27			21,37	21,96	22,66	23,49	24,44	25,53	12,91	26,78		
		32				24,13	24,89	25,77	26,76	27,89	14,08	29,18		
		38					27,91	28,85	29,88	31,06	15,64	32,38		

Q [W] = Cooling Capacity[1)]
P [kW] = Power Input[1)]
[1)] Parameters based on suction superheat 10 K and liquid subcooling 0 K
t_e [°C] = Evaporating Temperature
t_{11} [°C] = Ambient Temperature

Temperature applications: low medium high

R404A

Model		t_{11} \ t_e	-30	-25	-20	-15	-10	-5	0	5	7	10	12,5	15
JME-ZR-18E	Q	27		1 350	1 740	2 180	2 680	3 230	3 840	4 500	4 780	5 220		
		32		1 220	1 600	2 030	2 510	3 050	3 630	4 260	4 530	4 940		
		38		1 010	1 400	1 820	2 280	2 790	3 340	3 940	4 190	4 580		
	P	27		1,05	1,07	1,10	1,12	1,15	1,18	1,22	1,24	1,28		
		32		1,20	1,22	1,23	1,25	1,27	1,30	1,35	1,37	1,41		
		38		1,45	1,44	1,45	1,45	1,46	1,49	1,54	1,56	1,60		
JHE-ZR-18E	Q	27		1 370	1 770	2 220	2 720	3 290	3 920	4 610	4 900	5 350		
		32		1 240	1 640	2 070	2 570	3 120	3 720	4 380	4 660	5 090		
		38		1 060	1 450	1 880	2 360	2 880	3 460	4 080	4 340	4 750		
	P	27		1,02	1,04	1,07	1,10	1,13	1,16	1,20	1,22	1,25		
		32		1,18	1,19	1,20	1,22	1,24	1,28	1,32	1,33	1,37		
		38		1,40	1,39	1,39	1,40	1,42	1,44	1,48	1,50	1,54		
JME-ZR-28	Q	27		2 150	2 710	3 360	4 080	4 900	5 790	6 760	7 170	7 800		
		32		2 000	2 530	3 140	3 830	4 600	5 440	6 370	6 750	7 340		
		38		1 780	2 280	2 850	3 490	4 200	4 990					
	P	27		1,73	1,81	1,89	1,96	2,04	2,13	2,23	2,28	2,36		
		32		1,94	2,03	2,12	2,20	2,29	2,38	2,49	2,54	2,62		
		38		2,24	2,33	2,43	2,52	2,62	2,73					
JHE-ZR-28	Q	27		2 260	2 860	3 550	4 330	5 220	6 200	7 280	7 740	8 440		
		32		2 110	2 680	3 340	4 090	4 930	5 870	6 900	7 340	8 020		
		38		1 920	2 450	3 070	3 780	4 570	5 450	6 430	6 840	7 480		
	P	27		1,59	1,64	1,70	1,75	1,80	1,85	1,92	1,95	2,00		
		32		1,78	1,85	1,90	1,96	2,01	2,08	2,14	2,18	2,23		
		38		2,05	2,12	2,19	2,25	2,31	2,38	2,45	2,49	2,54		
JME-ZR-40	Q	27		3 070	3 860	4 760	5 770	6 900	8 150	9 520	10 090	10 980		
		32		2 870	3 620	4 470	5 430	6 490	7 670	8 970	9 510	10 350		
		38		2 620	3 320	4 100	4 990	5 980	7 070					
	P	27		2,37	2,48	2,59	2,70	2,81	2,94	3,08	3,15	3,26		
		32		2,66	2,78	2,90	3,02	3,15	3,29	3,44	3,51	3,62		
		38		3,06	3,19	3,33	3,46	3,60	3,76					
JHE-ZR-40	Q	27		3 270	4 150	5 150	6 300	7 600	9 060	10 690	11 380	12 480		
		32		3 080	3 910	4 870	5 960	7 210	8 600	10 160	10 830	11 880		
		38		2 960	3 770	4 700	5 760	6 970	8 320	9 840	10 490	11 510		
	P	27		2,11	2,16	2,21	2,26	2,30	2,35	2,41	2,44	2,48		
		32		2,36	2,42	2,48	2,53	2,58	2,64	2,70	2,73	2,77		
		38		2,52	2,59	2,65	2,71	2,76	2,82	2,88	2,91	2,96		
JME-ZR-64	Q	27		4 440	5 580	7 010	8 710	10 620	12 700	14 920	15 840	17 220		
		32		4 130	5 180	6 520	8 120	9 940	11 930	14 070	14 950	16 280		
		38		3 950	4 940	6 220	7 770	9 540	11 480	13 570	14 430	15 730		
	P	27		2,88	3,07	3,25	3,42	3,60	3,83	4,10	4,23	4,46		
		32		3,25	3,45	3,64	3,81	4,00	4,23	4,52	4,66	4,89		
		38		3,50	3,70	3,89	4,07	4,26	4,50	4,79	4,93	5,18		
JHE-ZR-64	Q	27		4 480	5 640	7 110	8 840	10 800	12 940	15 230	16 170	17 610		
		32		4 180	5 250	6 620	8 260	10 130	12 180	14 380	15 290	16 670		
		38		4 000	5 010	6 320	7 910	9 720	11 720	13 870	14 760	16 110		
	P	27		2,83	3,02	3,18	3,34	3,50	3,71	3,96	4,08	4,30		
		32		3,19	3,38	3,55	3,71	3,88	4,10	4,36	4,49	4,71		
		38		3,44	3,63	3,80	3,96	4,14	4,35	4,62	4,75	4,98		
JME-ZR-80	Q	27		5 720	7 290	9 020	10 930	13 040	15 340	17 840	18 890	20 510		
		32		5 270	6 790	8 450	10 270	12 280	14 460	16 840	17 830	19 360		
		38		4 690	6 140	7 710	9 430	11 320	13 360	15 590	16 520			
	P	27		4,00	4,12	4,26	4,41	4,59	4,79	5,03	5,14	5,32		
		32		4,46	4,59	4,74	4,90	5,09	5,31	5,55	5,67	5,86		
		38		5,08	5,22	5,39	5,56	5,76	5,99	6,25	6,38			

Q [W] = Cooling Capacity[1)]
P [kW] = Power Input[1)]
[1)] Parameters based on suction return temperature 20°C
t_e [°C] = Evaporating Temperature
t_{11} [°C] = Ambient Temperature

Temperature applications: low medium high

R404A

Model		t_{11} \ t_e	-30	-25	-20	-15	-10	-5	0	5	7	10	12,5	15
JHE-ZR-80	Q	27		5 890	7 520	9 320	11 340	13 580	16 050	18 770	19 920	21 710		
		32		5 460	7 040	8 780	10 720	12 860	15 220	17 820	18 920	20 620		
		38		4 910	6 420	8 080	9 920	11 950	14 170	16 610	17 640	19 250		
	P	27		3,83	3,92	4,01	4,12	4,25	4,40	4,57	4,65	4,79		
		32		4,26	4,35	4,45	4,57	4,70	4,86	5,04	5,13	5,27		
		38		4,84	4,94	5,05	5,18	5,32	5,48	5,68	5,77	5,92		
JME-ZR-100	Q	27		6 000	8 300	10 620	13 080	15 740	18 670	21 950	23 360	25 590		
		32		5 560	7 820	10 090	12 450	15 000	17 800	20 920	22 260	24 380		
		38		5 080	7 280	9 440	11 680	14 070	16 670	19 570	20 820	22 770		
	P	27		4,71	5,02	5,28	5,50	5,71	5,93	6,17	6,29	6,49		
		32		5,22	5,56	5,84	6,07	6,29	6,53	6,78	6,91	7,11		
		38		5,91	6,27	6,58	6,84	7,08	7,33	7,61	7,74	7,97		
JHE-ZR-100	Q	27		6 090	8 410	10 760	13 260	15 970	18 970	22 350	23 800	26 110		
		32		5 630	7 920	10 220	12 630	15 230	18 100	21 320	22 700	24 900		
		38		5 150	7 370	9 580	11 860	14 320	17 010	20 010	21 310	23 350		
	P	27		4,63	4,92	5,16	5,36	5,54	5,73	5,95	6,05	6,23		
		32		5,13	5,44	5,70	5,91	6,11	6,31	6,54	6,65	6,84		
		38		5,80	6,14	6,42	6,66	6,87	7,10	7,34	7,46	7,66		
JME-ZR-125	Q	27		7 970	10 420	13 080	16 000	19 200	22 700	26 540	28 150	30 660		
		32		7 290	9 700	12 280	15 080	18 140	21 460	25 100	26 620	28 980		
		38		6 420	8 770	11 260	13 930	16 810	19 920	23 310	24 730			
	P	27		5,79	6,11	6,41	6,69	6,98	7,29	7,62	7,78	8,03		
		32		6,35	6,71	7,06	7,39	7,71	8,06	8,42	8,59	8,85		
		38		7,05	7,49	7,91	8,30	8,68	9,07	9,47	9,65			
JHE-ZR-125	Q	27		8 330	10 880	13 680	16 780	20 240	24 090	28 360	30 190	33 050		
		32		7 670	10 180	12 910	15 910	19 230	22 900	26 970	28 710	31 430		
		38		6 830	9 300	11 930	14 800	17 950	21 410	25 230	26 860	29 400		
	P	27		5,50	5,73	5,93	6,11	6,29	6,48	6,69	6,79	6,95		
		32		6,04	6,31	6,55	6,76	6,96	7,17	7,40	7,50	7,67		
		38		6,71	7,05	7,35	7,61	7,85	8,09	8,34	8,46	8,64		
JME-ZR-160	Q	27		10 330	13 640	17 210	21 060	25 310	29 980	35 040	37 190	40 520		
		32		9 280	12 590	16 090	19 830	23 910	28 380	33 200	35 240	38 400		
		38		7 710	11 020	14 470	18 100	22 020	26 260	30 810	32 730	35 690		
	P	27		7,30	7,70	8,09	8,48	8,85	9,22	9,64	9,82	10,12		
		32		7,93	8,42	8,87	9,33	9,75	10,15	10,60	10,79	11,10		
		38		8,73	9,34	9,90	10,45	10,95	11,43	11,93	12,13	12,47		
JHE-ZR-160	Q	27		10 700	14 100	17 790	21 840	26 350	31 380	36 920	39 300	43 010		
		32		9 740	13 150	16 800	20 740	25 090	29 900	35 180	37 430	40 960		
		38		8 290	11 740	15 360	19 200	23 380	27 950	32 930	35 060	38 370		
	P	27		7,05	7,36	7,64	7,91	8,17	8,42	8,72	8,85	9,07		
		32		7,67	8,05	8,38	8,70	8,99	9,26	9,57	9,70	9,92		
		38		8,45	8,93	9,35	9,75	10,09	10,41	10,75	10,89	11,12		
JME-ZR-185	Q	27		13 860	17 470	21 580	26 210	31 460	37 350	43 810	46 550	50 810		
		32		12 380	16 090	20 220	24 800	29 910	35 580	41 730	44 340	48 360		
		38		10 640	14 440	18 570	23 040	27 960	33 320	39 070	41 490	45 200		
	P	27		8,71	9,09	9,46	9,83	10,20	10,57	11,03	11,23	11,56		
		32		9,50	9,97	10,42	10,87	11,29	11,71	12,20	12,41	12,76		
		38		10,50	11,11	11,68	12,24	12,75	13,25	13,80	14,03	14,41		
JHE-ZR-185	Q	27		14 520	18 180	22 380	27 160	32 640	38 850	45 780	48 760	53 440		
		32		13 000	16 780	21 010	25 760	31 120	37 130	43 770	46 620	51 080		
		38		11 250	15 140	19 390	24 060	29 250	34 990	41 270	43 940	48 110		
	P	27		8,39	8,67	8,92	9,18	9,42	9,67	9,99	10,13	10,38		
		32		9,16	9,53	9,85	10,15	10,43	10,71	11,05	11,19	11,44		
		38		10,14	10,62	11,04	11,43	11,78	12,11	12,48	12,63	12,89		

Q [W] = Cooling Capacity[1)]
P [kW] = Power Input[1)]
[1)] Parameters based on suction return temperature 20°C
t_e [°C] = Evaporating Temperature
t_{11} [°C] = Ambient Temperature

Temperature applications: low medium high

R404A

Model		t_{ll} \ t_e	-30	-25	-20	-15	-10	-5	0	5	7	10	12,5	15
JME-ZR-250	Q	27		16 480	21 760	27 280	33 140	39 570	46 670	54 400	57 710	62 850		
		32		14 310	19 670	25 180	30 960	37 250	44 120	51 560	54 730	59 650		
		38		11 130	16 570	22 090	27 790	33 920	40 550	47 660				
	P	27		11,55	12,13	12,77	13,48	14,21	14,98	15,87	16,26	16,90		
		32		12,73	13,39	14,11	14,90	15,69	16,53	17,48	17,89	18,57		
		38		14,31	15,11	15,96	16,88	17,78	18,72	19,77				
JHE-ZR-250	Q	27		17 460	22 900	28 620	34 790	41 620	49 240	57 700	61 350	67 100		
		32		15 450	21 010	26 760	32 860	39 540	46 930	55 070	58 570	64 070		
		38		12 540	18 260	24 090	30 150	36 700	43 850	51 640	54 980			
	P	27		10,98	11,41	11,87	12,39	12,92	13,49	14,14	14,43	14,89		
		32		12,12	12,60	13,11	13,67	14,23	14,83	15,51	15,81	16,29		
		38		13,62	14,19	14,78	15,41	16,04	16,69	17,43	17,75			
JME-ZR-310	Q	27		21 520	27 300	33 870	41 270	49 690	59 150	69 530	73 960	80 830		
		32		19 770	25 330	31 640	38 730	46 790	55 830	65 740	69 960	76 510		
		38		17 610	22 860	28 810	35 490	43 060	51 550	60 830	64 780	70 890		
	P	27		14,89	15,14	15,53	16,09	16,77	17,62	18,76	19,29	20,19		
		32		16,73	17,00	17,40	17,98	18,68	19,56	20,73	21,27	22,21		
		38		19,17	19,48	19,92	20,55	21,29	22,22	23,45	24,02	25,01		
JHE-ZR-310	Q	27		22 040	27 970	34 760	42 460	51 240	61 170	72 160	76 880	84 250		
		32		20 320	26 050	32 590	40 000	48 440	57 970	68 520	73 040	80 100		
		38		18 200	23 640	29 840	36 850	44 840	53 840	63 800	68 060			
	P	27		14,37	14,53	14,81	15,24	15,79	16,50	17,46	17,91	18,69		
		32		16,14	16,31	16,59	17,03	17,58	18,30	19,27	19,73	20,52		
		38		18,48	18,67	18,98	19,45	20,03	20,77	21,78	22,26			
JME-ZR-370	Q	27		27 120	34 310	42 450	51 590	61 920	73 440	85 970	91 290	99 490		
		32		24 190	31 570	39 750	48 760	58 800	69 850	81 750	86 780	94 490		
		38		20 740	28 270	36 420	45 210	54 810	65 210	76 270	80 910	87 970		
	P	27		17,74	18,58	19,40	20,24	21,08	21,94	22,96	23,40	24,14		
		32		19,30	20,36	21,36	22,36	23,32	24,30	25,42	25,88	26,66		
		38		21,32	22,66	23,92	25,18	26,34	27,48	28,76	29,26	30,12		

Q [W] = Cooling Capacity[1)]
P [kW] = Power Input[1)]
[1)] Parameters based on suction return temperature 20°C
t_e [°C] = Evaporating Temperature
t_{ll} [°C] = Ambient Temperature

Temperature applications: low | medium | **high**

R407C

Model		t_{11} \ t_e	-30	-25	-20	-15	-10	-5	0	5	7	10	12,5	15
JME-ZR-18E	Q	27			(1 460)	(1 860)	(2 310)	2 820	3 390	4 010	4 280	4 690	5 050	
		32				(1 690)	(2 130)	2 610	3 150	3 740	3 990	4 390	4 720	
		38					(1 880)	(2 340)	2 850	3 400	3 630	4 000		
	P	27			1,11	1,12	1,14	1,17	1,21	1,25	1,27	1,30	1,33	
		32				1,26	1,28	1,30	1,33	1,38	1,40	1,43	1,46	
		38					1,47	1,49	1,52	1,56	1,58	1,62		
JHE-ZR-18E	Q	27			(1 500)	(1 910)	2 380	2 900	3 500	4 150	4 430	4 870	5 250	
		32			(1 350)	(1 740)	(2 190)	2 700	3 260	3 880	4 150	4 560	4 920	
		38					(1 950)	(2 430)	2 960	3 540	3 790	4 180	4 510	
	P	27			1,07	1,09	1,10	1,13	1,15	1,19	1,20	1,23	1,25	
		32			1,22	1,22	1,23	1,25	1,27	1,31	1,32	1,35	1,38	
		38					1,41	1,42	1,45	1,48	1,50	1,53	1,56	
JME-ZR-28	Q	27			(2 120)	(2 700)	(3 380)	4 150	5 020	5 950	6 340	6 940	7 460	
		32				(2 470)	(3 100)	(3 820)	4 620	5 490	5 850	6 400	6 880	
		38						(3 410)	(4 130)	4 910	5 240	5 730		
	P	27			1,77	1,83	1,91	2,00	2,09	2,18	2,22	2,27	2,31	
		32				2,06	2,14	2,24	2,34	2,43	2,47	2,53	2,57	
		38						2,55	2,66	2,77	2,81	2,87		
JHE-ZR-28	Q	27			(2 280)	(2 890)	3 630	4 480	5 420	6 460	6 900	7 580	8 170	
		32			(2 090)	(2 660)	(3 350)	4 150	5 040	6 010	6 420	7 060	7 600	
		38					(3 010)	(3 740)	4 550	5 440	5 820	6 400	6 900	
	P	27			1,61	1,66	1,72	1,79	1,86	1,93	1,95	1,99	2,01	
		32			1,81	1,87	1,93	2,01	2,08	2,15	2,18	2,22	2,25	
		38					2,22	2,30	2,38	2,46	2,49	2,53	2,56	
JME-ZR-40	Q	27			(3 080)	(3 880)	(4 810)	5 880	7 050	8 300	8 820	9 620	10 290	
		32				(3 550)	(4 420)	(5 410)	6 500	7 650	8 130	8 870	9 490	
		38					(3 950)	(4 840)	(5 820)	6 860	7 290	7 940		
	P	27			2,38	2,48	2,60	2,74	2,89	3,04	3,10	3,19	3,25	
		32				2,79	2,92	3,07	3,23	3,39	3,45	3,54	3,61	
		38					3,35	3,51	3,68	3,85	3,92	4,01		
JHE-ZR-40	Q	27			(3 400)	(4 300)	5 390	6 650	8 080	9 670	10 340	11 390	12 310	
		32			(3 110)	(3 960)	(4 990)	6 180	7 540	9 040	9 680	10 670	11 540	
		38				(3 580)	(4 530)	5 630	6 890	8 280	8 870	9 790	10 590	
	P	27			2,07	2,12	2,18	2,25	2,32	2,38	2,40	2,42	2,44	
		32			2,34	2,40	2,47	2,54	2,61	2,67	2,69	2,72	2,74	
		38				2,76	2,83	2,91	2,99	3,06	3,08	3,11	3,13	
JME-ZR-64	Q	27		(3 540)	(4 680)	(6 030)	7 600	9 370	11 320	13 460	14 360	15 760		
		32			(4 300)	(5 550)	(7 000)	8 650	10 490	12 510	13 360	14 690		
		38					(6 350)	(7 850)	9 540	11 400	12 190	13 420		
	P	27		2,94	3,10	3,27	3,44	3,63	3,84	4,07	4,17	4,32		
		32			3,43	3,62	3,82	4,03	4,25	4,49	4,59	4,76		
		38					4,27	4,51	4,76	5,03	5,14	5,32		
JHE-ZR-64	Q	27		(3 580)	(4 740)	(6 120)	7 730	9 540	11 570	13 780	14 720	16 180		
		32			(4 350)	(5 630)	(7 120)	8 820	10 730	12 830	13 720	15 100		
		38				(5 120)	(6 460)	(8 020)	9 770	11 710	12 530	13 820		
	P	27		2,90	3,06	3,21	3,37	3,54	3,73	3,93	4,02	4,16		
		32			3,38	3,56	3,74	3,93	4,13	4,35	4,44	4,58		
		38				3,97	4,19	4,41	4,63	4,88	4,98	5,13		
JME-ZR-80	Q	27			(5 900)	(7 500)	9 280	11 240	13 380	15 690	16 660	18 160	19 460	
		32			(5 170)	(6 750)	(8 480)	10 380	12 440	14 650	15 590	17 030	18 280	
		38					(7 550)	(9 390)	11 370	13 490	14 380	15 760	16 950	
	P	27			3,69	3,90	4,11	4,33	4,56	4,81	4,92	5,09	5,24	
		32			4,10	4,34	4,58	4,81	5,06	5,32	5,43	5,60	5,74	
		38					5,15	5,42	5,69	5,97	6,08	6,26	6,41	

Q [W] = Cooling Capacity[1)]
P [kW] = Power Input[1)]
[1)] Parameters based on suction return temperature 20°C
t_e [°C] = Evaporating Temperature
t_{11} [°C] = Ambient Temperature
(Q) = Maximum suction superheat 10 K

Temperature applications: low | medium | **high**

R407C

Model		t_{11} \ t_e	-30	-25	-20	-15	-10	-5	0	5	7	10	12,5	15
JHE-ZR-80	Q	27			(6 100)	(7 770)	9 650	11 750	14 060	16 600	17 680	19 350	20 810	
		32			(5 420)	(7 070)	(8 900)	10 910	13 120	15 540	16 560	18 150	19 530	
		38				(6 150)	(7 940)	(9 890)	12 000	14 290	15 260	16 770	18 080	
	P	27			3,58	3,74	3,90	4,06	4,23	4,41	4,49	4,62	4,74	
		32			3,97	4,15	4,33	4,51	4,69	4,88	4,97	5,09	5,21	
		38				4,70	4,91	5,11	5,31	5,51	5,59	5,72	5,84	
JME-ZR-100	Q	27		(5 510)	(7 230)	(9 220)	(11 490)	14 050	16 920	20 100	21 450	23 580	25 440	
		32				(8 550)	(10 690)	(13 110)	15 830	18 850	20 150	22 180	23 960	
		38					(9 760)	(12 010)	(14 550)	17 390	18 600	20 520	22 200	
	P	27		4,68	4,97	5,19	5,38	5,58	5,81	6,09	6,23	6,46	6,68	
		32				5,71	5,97	6,22	6,49	6,80	6,95	7,19	7,41	
		38					6,70	7,04	7,37	7,73	7,89	8,15	8,38	
JHE-ZR-100	Q	27		(5 600)	(7 360)	(9 390)	(11 710)	14 350	17 320	20 610	22 020	24 240	26 180	
		32			(6 760)	(8 680)	(10 880)	13 380	16 190	19 330	20 680	22 800	24 660	
		38					(9 950)	(12 280)	14 910	17 840	19 110	21 110	22 860	
	P	27		4,62	4,87	5,06	5,22	5,38	5,57	5,82	5,94	6,15	6,35	
		32			5,32	5,60	5,83	6,03	6,25	6,52	6,64	6,85	7,06	
		38					6,55	6,84	7,12	7,43	7,57	7,80	8,01	
JME-ZR-125	Q	27		(7 240)	(9 240)	(11 520)	(14 110)	17 030	20 280	23 870	25 400	27 790	29 870	
		32				(10 660)	(13 110)	(15 870)	18 940	22 340	23 790	26 060	28 040	
		38					(11 950)	(14 500)	(17 360)	20 510	21 860	23 970	25 810	
	P	27		5,84	6,04	6,26	6,51	6,78	7,11	7,49	7,65	7,93	8,18	
		32				6,93	7,21	7,52	7,87	8,28	8,46	8,75	9,02	
		38					8,12	8,48	8,88	9,33	9,53	9,86	10,14	
JHE-ZR-125	Q	27		(7 650)	(9 800)	(12 290)	15 180	18 480	22 240	26 480	28 320	31 220	33 780	
		32			(9 080)	(11 450)	(14 180)	17 320	20 890	24 910	26 660	29 420	31 850	
		38				(10 440)	(12 990)	(15 910)	19 240	23 010	24 650	27 240	29 530	
	P	27		5,48	5,60	5,71	5,83	5,96	6,11	6,29	6,37	6,50	6,62	
		32			6,17	6,31	6,46	6,61	6,78	6,98	7,07	7,21	7,34	
		38				7,12	7,30	7,49	7,69	7,92	8,02	8,18	8,33	
JME-ZR-160	Q	27		(10 880)	(13 770)	(17 090)	(20 910)	25 240	30 110	35 530	37 860	41 510	44 700	
		32				(15 870)	(19 470)	23 570	28 170	33 310	35 510	38 980	42 010	
		38					(17 730)	(21 530)	25 820	30 610	32 680	35 930	38 780	
	P	27		7,80	8,17	8,49	8,80	9,13	9,51	9,97	10,19	10,54	10,87	
		32				9,38	9,76	10,14	10,57	11,07	11,29	11,67	12,01	
		38					11,02	11,49	11,99	12,55	12,79	13,19	13,56	
JHE-ZR-160	Q	27		(11 210)	(14 220)	(17 720)	21 760	26 400	31 670	37 600	40 170	44 220	47 790	
		32			(13 210)	(16 530)	(20 370)	24 770	29 770	35 410	37 850	41 710	45 110	
		38				(15 020)	(18 590)	(22 690)	27 370	32 640	34 930	38 560	41 760	
	P	27		7,55	7,83	8,06	8,27	8,48	8,74	9,06	9,22	9,48	9,73	
		32			8,59	8,89	9,15	9,41	9,69	10,03	10,19	10,46	10,71	
		38				10,03	10,38	10,71	11,04	11,42	11,59	11,87	12,13	
JME-ZR-185	Q	27		(13 520)	(17 100)	(21 260)	26 050	31 520	37 700	44 620	47 600	52 280	56 400	
		32			(15 910)	(19 850)	(24 380)	29 560	35 430	42 010	44 840	49 320	53 240	
		38				(18 050)	(22 260)	(27 080)	32 560	38 730	41 390	45 610	49 320	
	P	27		9,21	9,75	10,12	10,39	10,66	10,98	11,42	11,65	12,05	12,44	
		32			10,62	11,16	11,55	11,89	12,24	12,68	12,89	13,27	13,63	
		38				12,49	13,10	13,57	14,00	14,46	14,68	15,03	15,38	
JHE-ZR-185	Q	27		(13 760)	(17 450)	(21 760)	26 770	32 520	39 080	46 490	49 700	54 780	59 250	
		32			(16 220)	(20 300)	(25 050)	30 510	36 740	43 800	46 850	51 700	55 980	
		38				(18 520)	(22 940)	(28 040)	33 870	40 500	43 380	47 950	52 000	
	P	27		9,05	9,50	9,76	9,92	10,07	10,28	10,63	10,83	11,18	11,55	
		32			10,40	10,82	11,08	11,28	11,49	11,80	11,97	12,27	12,58	
		38				12,14	12,59	12,91	13,17	13,47	13,62	13,89	14,16	

Q [W] = Cooling Capacity[1)]
P [kW] = Power Input[1)]
[1)] Parameters based on suction return temperature 20°C
t_e [°C] = Evaporating Temperature
t_{11} [°C] = Ambient Temperature
(Q) = Maximum suction superheat 10 K

Temperature applications: low medium high

R407C

Model		t_{11} \ t_e	-30	-25	-20	-15	-10	-5	0	5	7	10	12,5	15
JME-ZR-250	Q	27		(17 110)	(21 720)	(27 010)	(33 080)	39 940	47 640	56 160	59 800	65 500	70 460	
		32				(24 920)	(30 660)	(37 150)	44 420	52 470	55 900	61 270	65 950	
		38					(27 560)	(33 590)	(40 340)	47 820	51 010	56 010	60 360	
	P	27		12,87	13,08	13,47	14,01	14,69	15,51	16,48	16,91	17,61	18,24	
		32				15,01	15,55	16,26	17,14	18,19	18,67	19,44	20,13	
		38					17,85	18,56	19,48	20,61	21,13	21,97	22,73	
JME-ZR-310	Q	27		(20 300)	(26 370)	(33 340)	(41 290)	50 300	60 410	71 630	76 440	83 980	90 570	
		32			(23 890)	(30 490)	(38 010)	46 520	56 080	66 720	71 270	78 430	84 690	
		38					(34 040)	(41 970)	50 880	60 820	65 090	71 800	77 680	
	P	27		15,67	16,08	16,59	17,22	17,97	18,86	19,89	20,34	21,08	21,74	
		32			18,11	18,59	19,20	19,94	20,82	21,86	22,32	23,07	23,74	
		38					21,97	22,67	23,53	24,56	25,02	25,77	26,45	
JME-ZR-370	Q	27		(26 570)	(33 590)	(41 720)	(51 060)	61 690	73 670	87 040	92 780	101 800	109 710	
		32			(31 160)	(38 830)	(47 650)	57 700	69 060	81 760	87 220	95 830	103 380	
		38					(43 490)	(52 840)	63 440	75 340	80 480	88 590	95 730	
	P	27		18,72	19,95	20,82	21,49	22,13	22,88	23,86	24,34	25,17	25,99	
		32			21,71	22,95	23,90	24,71	25,54	26,53	27,00	27,80	28,57	
		38					26,94	28,06	29,08	30,16	30,63	31,43	32,17	

Q [W] = Cooling Capacity[1)]
P [kW] = Power Input[1)]
[1)] Parameters based on suction return temperature 20°C
t_e [°C] = Evaporating Temperature
t_{11} [°C] = Ambient Temperature
(Q) = Maximum suction superheat 10 K

Temperature applications: low | medium | high

R134a

Model		t_{11} \ t_e	-30	-25	-20	-15	-10	-5	0	5	7	10	12,5	15
JME-ZR-28	Q	27					2 526	3 155	3 869	4 647	4 968	5 468	5 899	
		32						2 985	3 660	4 395	4 696	5 165	5 572	
		38							3 409	4 090	4 366	4 798	5 173	
		43								3 829	4 085	4 485	4 835	
	P	27					1,09	1,14	1,19	1,26	1,29	1,33	1,37	
		32						1,29	1,35	1,42	1,45	1,50	1,54	
		38							1,56	1,64	1,67	1,72	1,76	
		43								1,84	1,87	1,92	1,97	
JME-ZR-40.10	Q	27						4 169	5 047	5 981	6 366	6 963	7 502	
		32							4 763	5 652	6 012	6 573	7 079	
		38								5 248	5 576	6 091	6 556	
		43								4 906	5 208	5 687	6 118	
	P	27						1,63	1,72	1,84	1,89	1,97	2,06	
		32							1,94	2,07	2,12	2,20	2,32	
		38								2,37	2,43	2,52	2,68	
		43								2,65	2,71	2,80	3,01	
JME-ZR-40	Q	27					3 522	4 356	5 283	6 286	6 709	7 365	7 960	
		32						4 099	4 995	5 954	6 352	6 972	7 535	
		38							4 650	5 554	5 921	6 497	7 020	
		43								5 218	5 560	6 100	6 590	
	P	27					1,42	1,48	1,56	1,64	1,68	1,74	1,82	
		32						1,68	1,76	1,86	1,90	1,96	2,04	
		38							2,03	2,14	2,18	2,25	2,36	
		43								2,39	2,44	2,51	2,65	
JME-ZR-64.10	Q	27						6 421	7 660	8 984	9 535	10 389	11 152	
		32						6 084	7 253	8 490	9 000	9 792	10 502	
		38								7 887	8 346	9 061	9 703	
		43									7 806	8 458	9 048	
	P	27						2,47	2,62	2,80	2,88	3,00	3,15	
		32						2,75	2,91	3,10	3,18	3,31	3,46	
		38								3,49	3,58	3,72	3,90	
		43									3,94	4,09	4,29	
JME-ZR-64	Q	27					5 668	6 960	8 416	10 042	10 747	11 855	12 856	
		32						6 623	8 006	9 540	10 201	11 242	12 185	
		38							7 512	8 935	9 543	10 503	11 375	
		43							7 095	8 425	8 990	9 882	10 695	
	P	27					2,03	2,09	2,17	2,25	2,29	2,35	2,47	
		32						2,32	2,40	2,50	2,54	2,61	2,71	
		38							2,73	2,83	2,87	2,95	3,05	
		43							3,03	3,14	3,19	3,26	3,37	
JME-ZR-80.10	Q	27					6 691	8 175	9 848	11 693	12 475	13 696	14 805	
		32						7 714	9 302	11 043	11 777	12 924	13 966	
		38							8 645	10 259	10 935	11 993	12 954	
		43								9 600	10 227	11 211	12 106	
	P	27					2,42	2,51	2,62	2,74	2,80	2,89	3,07	
		32						2,80	2,92	3,06	3,12	3,21	3,39	
		38							3,32	3,48	3,54	3,65	3,84	
		43								3,87	3,94	4,05	4,27	

Q [W] = Cooling Capacity[1)]
P [kW] = Power Input[1)]
[1)] Parameters based on suction return temperature 25°C
t_e [°C] = Evaporating Temperature
t_{11} [°C] = Ambient Temperature

Temperature applications: low medium high

R134a

Model		t_{11} \ t_e	-30	-25	-20	-15	-10	-5	0	5	7	10	12,5	15
JME-ZR-80	Q	27					6 760	8 272	9 982	11 878	12 686	13 949	15 098	
		32						7 812	9 437	11 229	11 988	13 178	14 260	
		38							8 780	10 445	11 145	12 245	13 246	
		43							8 225	9 783	10 434	11 459	12 391	
	P	27					2,37	2,45	2,55	2,66	2,71	2,79	2,97	
		32						2,73	2,84	2,96	3,02	3,11	3,27	
		38							3,24	3,37	3,43	3,53	3,70	
		43							3,61	3,76	3,82	3,92	4,12	
JME-ZR-100.10	Q	27					8 109	9 839	11 766	13 895	14 810	16 242	17 491	
		32					7 702	9 351	11 171	13 169	14 036	15 391	16 573	
		38						8 760	10 451	12 291	13 099	14 360	15 460	
		43							9 843	11 549	12 308	13 489	14 520	
	P	27					3,27	3,39	3,53	3,70	3,77	3,89	3,99	
		32					3,62	3,75	3,90	4,07	4,15	4,27	4,38	
		38						4,23	4,39	4,58	4,66	4,79	4,90	
		43							4,85	5,05	5,13	5,26	5,38	
JME-ZR-100	Q	27				6 742	8 316	10 135	12 192	14 502	15 499	17 069	18 450	
		32					7 912	9 648	11 595	13 770	14 716	16 204	17 513	
		38						9 060	10 875	12 885	13 769	15 157	16 378	
		43							10 266	12 140	12 972	14 278	15 426	
	P	27				3,03	3,11	3,19	3,29	3,41	3,46	3,54	3,62	
		32					3,43	3,53	3,63	3,76	3,81	3,90	3,98	
		38						3,98	4,10	4,23	4,29	4,39	4,47	
		43							4,53	4,67	4,73	4,83	4,92	

Q [W] = Cooling Capacity[1)]
P [kW] = Power Input[1)]
[1)] Parameters based on suction return temperature 25°C
t_e [°C] = Evaporating Temperature
t_{11} [°C] = Ambient Temperature

Temperature applications: low medium high

R404A

Model		t_{11} \ t_e	-30	-25	-20	-15	-10	-5	0	5	7	10	12,5	15
JME-ZB-15	Q	27	1 530	1 950	2 380	2 910	3 490	4 100	4 750	5 440	5 710	6 160		
		32		1 750	2 140	2 640	3 170	3 740	4 330	4 950	5 190	5 610		
		38			1 850	2 310	2 790	3 300	3 820	4 350	4 550	4 930		
	P	27	1,60	1,70	1,80	1,80	1,80	1,80	1,90	1,90	1,90	1,90		
		32		1,90	2,00	2,00	2,00	2,00	2,00	2,10	2,10	2,10		
		38			2,30	2,30	2,30	2,20	2,20	2,30	2,30	2,30		
JME-ZB-19	Q	27	2 150	2 640	3 200	3 830	4 540	5 320	6 170	7 070	7 470	8 060		
		32		2 460	2 950	3 540	4 200	4 920	5 700	6 520	6 890	7 440		
		38			2 660	3 200	3 790	4 440	5 130	5 850	6 200	6 690		
	P	27	1,70	1,80	1,90	1,90	2,00	2,00	2,10	2,20	2,20	2,20		
		32		2,00	2,10	2,10	2,20	2,20	2,30	2,40	2,40	2,40		
		38			2,30	2,40	2,40	2,50	2,50	2,60	2,60	2,60		
JME-ZB-21	Q	27	2 530	3 100	3 730	4 440	5 260	6 120	7 070	8 070	8 490	9 120		
		32		2 870	3 440	4 100	4 860	5 640	6 510	7 420	7 810	8 380		
		38			3 090	3 680	4 370	5 060	5 830	6 630	6 990	7 490		
	P	27	2,1	2,2	2,3	2,4	2,5	2,6	2,6	2,7	2,8	2,8		
		32		2,4	2,6	2,6	2,7	2,8	2,9	3	3	3,1		
		38			2,9	2,9	3	3,1	3,2	3,3	3,3	3,3		
JME-ZB-26	Q	27	3 100	3 840	4 670	5 610	6 690	7 890	9 220	10 680	11 290	12 230		
		32	2 880	3 570	4 330	5 200	6 200	7 320	8 530	9 870	10 440	11 310		
		38		3 410	4 130	4 960	5 910	6 980	8 130	9 390	9 940	10 780		
	P	27	2,3	2,3	2,4	2,5	2,6	2,6	2,7	2,7	2,8	2,8		
		32	2,5	2,6	2,7	2,8	2,8	2,9	3	3	3	3,1		
		38		2,8	2,9	3	3	3,1	3,1	3,2	3,2	3,3		
JME-ZB-30	Q	27	3 600	4 430	5 380	6 460	7 670	9 020	10 490	12 100	12 770	13 810		
		32	3 340	4 120	4 970	5 980	7 100	8 350	9 710	11 190	11 790	12 760		
		38		3 940	4 740	5 700	6 770	7 950	9 250	10 660	11 220	12 140		
	P	27	2,7	2,7	2,9	2,9	3	3,1	3,2	3,3	3,3	3,4		
		32	2,9	3	3,2	3,3	3,4	3,4	3,5	3,6	3,6	3,7		
		38		3,2	3,4	3,5	3,5	3,6	3,7	3,8	3,8	3,9		
JME-ZB-38	Q	27	4 430	5 480	6 610	7 930	9 400	11 010	12 770	14 700	15 490	16 720		
		32	4 100	5 090	6 110	7 340	8 700	10 180	11 820	13 580	14 290	15 430		
		38	3 910	4 860	5 810	6 990	8 280	9 690	11 250	12 920	13 580	14 670		
	P	27	3,4	3,5	3,7	3,8	3,9	4,0	4,1	4,2	4,3	4,4		
		32	3,7	3,8	4,1	4,2	4,3	4,4	4,5	4,6	4,7	4,7		
		38	3,9	4,1	4,3	4,4	4,5	4,6	4,7	4,8	4,9	5,0		
JME-ZB-45	Q	27	5 120	6 290	7 570	9 060	10 700	12 500	14 440	16 500	17 380	18 700		
		32		5 840	7 000	8 370	9 890	11 540	13 340	15 210	15 990	17 220		
		38			6 300	7 540	8 920	10 400	12 020	13 670	14 340	15 450		
	P	27	3,90	4,00	4,30	4,40	4,50	4,70	4,90	5,00	5,10	5,20		
		32		4,50	4,70	4,90	5,00	5,10	5,30	5,40	5,50	5,60		
		38			5,30	5,40	5,50	5,70	5,80	5,90	6,00	6,10		
JME-ZB-56	Q	27	6 080	7 460	9 010	10 770	12 720	14 870	17 210	19 720	20 760	22 390		
		32		6 930	8 350	9 980	11 780	13 770	15 930	18 220	19 130	20 620		
		38		6 290	7 560	9 030	10 650	12 440	14 380	16 390	17 160	18 480		
	P	27	4,90	5,10	5,40	5,60	5,80	6,00	6,30	6,50	6,70	6,80		
		32		5,60	5,90	6,10	6,30	6,60	6,80	7,00	7,20	7,30		
		38		6,20	6,60	6,80	7,00	7,20	7,40	7,60	7,80	7,90		
JME-ZB-75	Q	27	8 730	10 620	12 700	15 060	17 670	20 470	23 500	26 680	27 970	29 980		
		32		9 880	11 770	13 960	16 370	18 940	21 730	24 620	25 800	27 620		
		38			10 660	12 630	14 800	17 110	19 610	22 170				
	P	27	6,10	6,60	7,00	7,50	7,90	8,40	8,90	9,40	9,60	9,90		
		32		7,10	7,70	8,10	8,50	9,00	9,40	9,90	10,10	10,40		
		38			8,40	8,80	9,20	9,70	10,00	10,50				

Q [W] = Cooling Capacity[1)]
P [kW] = Power Input[1)]
[1)] Parameters based on suction return temperature 20°C
t_e [°C] = Evaporating Temperature
t_{11} [°C] = Ambient Temperature

Temperature applications: low medium high

R404A

Model		t_{ll} \ t_e	-30	-25	-20	-15	-10	-5	0	5	7	10	12,5	15
JME-ZB-92	Q	27	11 070	13 470	16 170	19 250	22 650	26 400	30 520	34 700	36 410	39 100		
		32		12 540	15 000	17 860	21 010	24 470	28 290	32 070	33 530	35 930		
		38			13 600	16 190	19 040	22 140	25 600	28 910	30 060	32 110		
	P	27	7,8	8,3	8,8	9,2	9,7	10,3	10,8	11,4	11,7	12,1		
		32		9	9,6	10	10,5	11	11,5	12,1	12,4	12,8		
		38			10,5	11	11,5	12	12,4	13	13,3	13,6		
JME-ZB-110	Q	27	12 960	15 820	18 970	22 550	26 500	30 700	35 410	40 200	42 270	45 160		
		32		14 630	17 520	20 850	24 480	28 410	32 790	37 110	38 950	41 560		
		38			15 790	18 810	22 050	25 630	29 610	33 370				
	P	27	9,7	10,3	11	11,5	12,2	12,8	13,5	14,2	14,5	14,9		
		32		11,1	11,9	12,5	13,2	13,8	14,3	15	15,4	15,7		
		38			13,1	13,7	14,4	14,9	15,4	16,1				

Q [W] = Cooling Capacity[1)]
P [kW] = Power Input[1)]
[1)] Parameters based on suction return temperature 20°C
t_e [°C] = Evaporating Temperature
t_{ll} [°C] = Ambient Temperature

Temperature applications: low medium high

R404A

Model		t_{11} \ t_e	-50	-45	-40	-35	-30	-25	-20	-15	-10	-5	0	5
JLE-ZF-09	Q	27			1 540	1 924	2 351	2 821	3 330	3 864	4 463			
		32			1 447	1 808	2 204	2 637	3 101	3 570	4 112			
		38			1 329	1 662	2 021	2 409	2 815	3 208	3 680			
	P	27			1,79	1,83	1,89	1,98	2,10	2,29	2,45			
		32			1,91	1,94	2,00	2,09	2,21	2,42	2,58			
		38			2,06	2,08	2,13	2,22	2,34	2,57	2,73			
JLE-ZF-11	Q	27			1 928	2 404	2 924	3 482	4 095	4 708	5 415			
		32			1 815	2 266	2 751	3 263	3 822	4 354	4 991			
		38			1 678	2 099	2 541	2 996	3 488	3 921	4 468			
	P	27			2,15	2,21	2,30	2,42	2,57	2,82	3,02			
		32			2,29	2,34	2,42	2,54	2,69	2,96	3,16			
		38			2,45	2,49	2,56	2,69	2,84	3,13	3,34			
JLE-ZF-13	Q	27			2 181	2 697	3 287	3 919	4 615	5 272	6 037			
		32			2 037	2 517	3 068	3 648	4 285	4 856	5 545			
		38			1 862	2 297	2 800	3 316	3 879	4 342				
	P	27			2,35	2,46	2,60	2,77	2,96	3,29	3,53			
		32			2,50	2,62	2,75	2,93	3,13	3,47	3,73			
		38			2,69	2,81	2,94	3,12	3,32	3,71				
JLE-ZF-15	Q	27			2 756	3 441	4 196	5 022	5 904	6 753	7 739			
		32			2 577	3 222	3 933	4 693	5 497	6 226	7 108			
		38			2 361	2 960	3 615	4 296	5 004	5 586	6 340			
	P	27			2,67	2,87	3,08	3,32	3,59	3,99	4,32			
		32			2,85	3,06	3,26	3,52	3,79	4,23	4,56			
		38			3,07	3,28	3,49	3,76	4,04	4,52	4,86			
JLE-ZF-18	Q	27			3 367	4 218	5 175	6 245	7 428	8 702	10 153			
		32			3 157	3 959	4 852	5 838	6 921	8 060	9 382			
		38			2 922	3 669	4 488	5 378	6 344	7 324	8 493			
	P	27			3,24	3,39	3,56	3,77	4,00	4,33	4,62			
		32			3,45	3,60	3,77	3,99	4,23	4,59	4,89			
		38			3,68	3,83	4,01	4,23	4,48	4,89	5,19			
JLE-ZF-24	Q	27			4 156	5 276	6 511	7 858	9 353	10 900	12 683			
		32			3 904	4 974	6 135	7 381	8 755	10 129	11 742			
		38			3 601	4 609	5 682	6 807	8 037	9 204	10 615			
	P	27			4,05	4,34	4,64	4,95	5,29	5,71	6,11			
		32			4,31	4,61	4,92	5,25	5,60	6,07	6,48			
		38			4,62	4,94	5,26	5,61	5,98	6,49	6,92			
JLE-ZF-33	Q	27			5 354	7 188	9 082	10 997	13 070	14 956	17 289			
		32			4 950	6 795	8 695	10 511	12 451	13 996	16 109			
		38			4 468	6 323	8 230	9 924	11 702	12 834	14 678			
	P	27			5,59	6,07	6,58	7,09	7,64	8,35	8,97			
		32			5,97	6,48	7,01	7,55	8,12	8,89	9,53			
		38			6,42	6,97	7,52	8,10	8,71	9,55	10,20			
JLE-ZF-40	Q	27			6 715	8 432	10 261	12 172	14 178	16 042	18 169			
		32			6 266	7 883	9 585	11 323	13 126	14 707	16 578			
		38			5 726	7 224	8 772	10 305	11 866					
	P	27			7,07	7,67	8,30	9,03	9,79	10,80	11,68			
		32			7,53	8,15	8,79	9,55	10,33	11,41	12,30			
		38			8,08	8,72	9,37	10,17	10,98					
JLE-ZF-48	Q	27			7 388	9 403	11 477	13 489	15 543	17 119	19 233			
		32			6 800	8 719	10 678	12 504	14 346	15 576				
		38			6 094	7 897	9 720	11 323	12 916					
	P	27			8,92	9,75	10,56	11,45	12,29	13,58	14,55			
		32			9,47	10,33	11,16	12,08	12,92	14,29				
		38			10,13	11,03	11,88	12,83	13,67					

Q [W] = Cooling Capacity[1)]
P [kW] = Power Input[1)]
[1)] Parameters based on suction return temperature 20°C
t_e [°C] = Evaporating Temperature
t_{11} [°C] = Ambient Temperature

Temperature applications: low medium high

R404A

Model		t_{ll} \ t_e	-50	-45	-40	-35	-30	-25	-20	-15	-10	-5	0	5
JLE-CP-100	Q	27	454	660	907	1 197	1 532	1 915	2 342					
		32	384	578	813	1 085	1 399	1 758	2 157					
		38	295	474	695	945	1 232	1 562	1 927					
	P	27	0,63	0,72	0,81	0,91	1,02	1,15	1,29					
		32	0,61	0,70	0,80	0,92	1,04	1,18	1,35					
		38	0,57	0,68	0,78	0,92	1,06	1,23	1,43					
JLE-CP-150	Q	27	540	770	1 050	1 380	1 760	2 180	2 650					
		32	460	690	950	1 260	1 610	2 000	2 430					
		38	370	580	820	1 100	1 420	1 780	2 170					
	P	27	0,69	0,79	0,90	1,01	1,14	1,29	1,45					
		32	0,67	0,77	0,89	1,02	1,17	1,33	1,52					
		38	0,64	0,75	0,88	1,03	1,20	1,38	1,60					
JLE-CP-200	Q	27		820	1 310	1 860	2 460	3 120	3 830					
		32		640	1 100	1 620	2 180	2 780	3 440					
		38			860	1 350	1 840	2 380	2 960					
	P	27		0,89	1,12	1,36	1,63	1,91	2,22					
		32		0,87	1,11	1,36	1,64	1,94	2,26					
		38			1,10	1,35	1,65	1,97	2,31					
JLE-CP-300	Q	27	460	1 060	1 780	2 580	3 450	4 430	5 510					
		32		780	1 450	2 200	3 010	3 910	4 910					
		38		440	1 070	1 750	2 480	3 300	4 190					
	P	27	1,04	1,32	1,62	1,97	2,36	2,80	3,28					
		32		1,25	1,56	1,93	2,36	2,83	3,36					
		38		1,17	1,49	1,89	2,35	2,87	3,45					
JLE-CP-400	Q	27	1 320	2 120	3 070	4 160	5 410	6 820	8 380					
		32	1 020	1 780	2 680	3 700	4 860	6 170	7 610					
		38			2 450	3 430	4 530	5 780	7 160					
	P	27	1,39	1,76	2,16	2,57	3,02	3,51	4,03					
		32	1,30	1,67	2,08	2,54	3,03	3,56	4,14					
		38			2,04	2,52	3,04	3,60	4,20					
JLE-CP-500	Q	27			3 900	5 070	6 400	7 880	9 510					
		32			3 490	4 590	5 830	7 190	8 700					
		38			3 260	4 300	5 490	6 790	8 230					
	P	27			2,90	3,44	4,00	4,59	5,20					
		32			2,89	3,46	4,05	4,69	5,35					
		38			2,89	3,47	4,08	4,75	5,44					
JLE-CP-600	Q	27		(2 530)	(3 800)	5 510	7 200	9 040	11 050	13 220	15530	17990		
		32		(2 100)	(3 320)	4 950	6 540	8 240	10 090	12 090	14190	16440		
		38			(2 760)	4 270	5 740	7 280	8 950	10 740	12600			
	P	27		2,66	3,27	3,95	4,61	5,33	6,11	6,97	7,93	8,99		
		32		2,62	3,25	4,00	4,69	5,46	6,30	7,23	8,26	9,40		
		38			3,22	4,06	4,79	5,61	6,52	7,53	8,66			
JLE-3SC-750	Q	27		(3 190)	4 460	5 960	7 670	9 580	11 640	13 820	16 090	18 410		
		32		(2 790)	(3 960)	5 330	6 890	8 620	10 480	12 450	14 480			
		38		(2 340)	(3 390)	(4 600)	5 980	7 490	9 110					
	P	27		2,82	3,53	4,32	5,17	6,09	7,06	8,11	9,21	10,38		
		32		2,79	3,52	4,33	5,21	6,15	7,17	8,25	9,40			
		38		2,74	3,48	4,31	5,22	6,21	7,26					
JLE-3SS-1000	Q	27		(4 680)	6 500	8 550	10 830	13 330	16 010	18 840	21 760	24 730		
		32		(4 100)	(5 840)	7 770	9 900	12 210	14 660	17 230	19 860			
		38		(3 430)	(5 070)	(6 860)	8 800	10 870	13 040					
	P	27		4,35	5,18	6,14	7,23	8,44	9,78	11,25	12,87	14,65		
		32		4,40	5,23	6,21	7,33	8,58	9,98	11,53	13,23			
		38		4,50	5,32	6,31	7,46	8,77	10,24					

Q [W] = Cooling Capacity[1)]
P [kW] = Power Input[1)]
[1)] Parameters based on suction return temperature 20°C
t_e [°C] = Evaporating Temperature
t_{ll} [°C] = Ambient Temperature
(Q) = Maximum suction temperature 0°C

Temperature applications: low medium high

R404A

Model		t_{ll} \ t_e	-50	-45	-40	-35	-30	-25	-20	-15	-10	-5	0	5
JLE-4SF-1000	Q	27		(5 460)	(7 500)	9 800	12 370	15 180	18 210	21 430	24 800	28 250		
		32		(4 800)	(6 720)	8 860	11 210	13 770	16 500	19 390	22 370			
		38		(4 010)	(5 790)	(7 720)	9 810	12 060	14 430					
	P	27		4,46	5,53	6,68	7,91	9,23	10,65	12,16	13,77	15,50		
		32		4,33	5,46	6,68	7,99	9,40	10,91	12,52	14,23			
		38		4,13	5,33	6,64	8,05	9,56	11,17					
JLE-4SL-1500.10	Q	27		(6 800)	(9 330)	12 110	15 080	18 200	21 390	24 580	27 670	30 580		
		32		(6 020)	(8 410)	10 970	13 660	16 450	19 260	22 020	24 640	27 050		
		38		(5 130)	(7 320)	(9 610)	11 970	14 350	16 700	18 940				
	P	27		5,91	7,23	8,71	10,35	12,16	14,17	16,39	18,83	21,52		
		32		5,82	7,21	8,75	10,47	12,37	14,47	16,79	19,33	22,12		
		38		5,70	7,15	8,77	10,58	12,58	14,79	17,22				
JLE-4SL-1500	Q	27		(7 210)	(9 970)	13 080	16 540	20 340	24 430	28 780	33 320	37 980		
		32		(6 390)	(9 000)	11 890	15 070	18 520	22 220	26 120	30 160	34 290		
		38		(5 460)	(7 860)	(10 480)	13 300	16 330	19 540	22 880				
	P	27		5,94	7,24	8,65	10,20	11,87	13,69	15,66	17,80	20,12		
		32		5,87	7,23	8,72	10,35	12,12	14,05	16,13	18,39	20,84		
		38		5,75	7,18	8,76	10,49	12,38	14,43	16,66				
JLE-4ST-2000.10	Q	27		(8 190)	(11 360)	14 930	18 880	23 180	27 780	32 600	37 560	42 570		
		32		(7 130)	(10 130)	13 450	17 100	21 020	25 180	29 500	33 910			
		38		(5 880)	(8 650)	(11 670)	14 920	18 370	21 970	25 670				
	P	27		6,49	8,11	9,87	11,79	13,86	16,09	18,49	21,08	23,85		
		32		6,33	8,03	9,88	11,90	14,08	16,43	18,96	21,67			
		38		6,07	7,86	9,82	11,95	14,27	16,76	19,44				
JLE-4ST-2000	Q	27		(8 310)	(11 560)	15 240	19 350	23 880	28 770	33 980	39 430	45 040		
		32		(7 250)	(10 320)	13 760	17 560	21 700	26 160	30 860	35 750			
		38		(6 000)	(8 840)	(11 970)	15 370	19 040	22 930	27 010				
	P	27		6,51	8,11	9,86	11,75	13,78	15,94	18,26	20,74	23,39		
		32		6,35	8,04	9,88	11,88	14,02	16,31	18,76	21,38			
		38		6,10	7,88	9,83	11,95	14,23	16,67	19,29				
JLE-6SL-2500.10	Q	27		(9 930)	(13 530)	17 610	22 050	26 740	31 540	36 320	40 970			
		32		(8 740)	(12 100)	(15 870)	19 930	24 170	28 460	32 680				
		38		(7 380)	(10 450)	(13 820)	17 400	21 080						
	P	27		8,34	10,41	12,72	15,27	18,06	21,07	24,30	27,73			
		32		8,24	10,39	12,79	15,45	18,34	21,47	24,82				
		38		8,08	10,32	12,83	15,60	18,62						
JLE-6SL-2500	Q	27		(10 120)	(13 820)	18 070	22 750	27 760	32 980	38 280	43 550			
		32		(8 910)	(12 380)	(16 310)	20 600	25 150	29 840	34 570				
		38		(7 540)	(10 710)	(14 240)	18 040	22 010						
	P	27		8,35	10,40	12,69	15,21	17,94	20,87	24,00	27,31			
		32		8,26	10,39	12,78	15,40	18,24	21,30	24,56				
		38		8,10	10,33	12,82	15,57	18,55						
JLE-6ST-3200	Q	27		(12 350)	(16 690)	21 620	27 070	32 950	39 120	45 480	51 880			
		32		(10 920)	(14 970)	(19 520)	24 490	29 810	35 360	41 010				
		38		(9 320)	(13 020)	(17 090)	21 490	26 120						
	P	27		9,74	12,02	14,60	17,47	20,65	24,17	28,04	32,29			
		32		9,54	11,91	14,60	17,61	20,96	24,66	28,72				
		38		9,26	11,74	14,56	17,74	21,28						
JLE-8SH-3700	Q	27		(14 330)	(19 980)	26 470	33 730	41 670	50 180	59 130	68 390	77 840		
		32		(12 510)	(17 850)	(23 920)	30 640	37 940	45 700	53 800	62 140			
		38		(10 390)	(15 330)	(20 860)	26 900	33 380	40 200					
	P	27		11,68	14,51	17,58	20,88	24,41	28,14	32,08	36,21	40,52		
		32		11,36	14,33	17,57	21,06	24,79	28,74	32,91	37,28			
		38		10,86	14,00	17,44	21,15	25,12	29,33					

Q [W] = Cooling Capacity[1)]
P [kW] = Power Input[1)]
[1)] Parameters based on suction return temperature 20°C
t_e [°C] = Evaporating Temperature
t_{ll} [°C] = Ambient Temperature
(Q) = Maximum suction temperature 0°C

Temperature applications: low medium high

R404A

Model		t_{11} \ t_e	-30	-25	-20	-15	-10	-5	0	5	7	10	12,5	15
JME-3SC-1000.10	Q	27	8 580	10 820	13 360	16 170	19 210	22 440	25 810	29 260	30 650			
		32	7 760	9 860	12 210	14 780	17 540	20 460	23 470					
		38	6 800	8 720	10 840	13 120	15 550							
	P	27	5,31	6,08	6,92	7,81	8,75	9,74	10,77	11,86	12,30			
		32	5,36	6,17	7,06	8,00	9,01	10,06	11,17					
		38	5,38	6,25	7,19	8,19	9,27							
JME-3SC-1000	Q	27	9 050	11 490	14 310	17 520	21 090	25 000	29 240	33 760	35 640			
		32	8 190	10 490	13 110	16 080	19 360	22 950	26 820	30 940	32 640			
		38	7 200	9 310	11 700	14 360	17 290	20 470	23 890					
	P	27	5,27	6,00	6,77	7,58	8,40	9,24	10,10	10,96	11,31			
		32	5,33	6,12	6,95	7,82	8,72	9,64	10,59	11,54	11,92			
		38	5,38	6,21	7,11	8,06	9,04	10,06	11,10					
JME-3SS-1500.10	Q	27	12 330	15 380	18 800	22 580	26 660	31 030	35 620	40 380	42 320			
		32	11 260	14 130	17 310	20 780	24 510	28 480	32 620	36 910				
		38	9 990	12 640	15 510	18 610	21 910	25 370						
	P	27	7,53	8,62	9,76	10,93	12,16	13,45	14,80	16,21	16,79			
		32	7,63	8,81	10,03	11,29	12,60	13,97	15,40	16,90				
		38	7,68	8,96	10,29	11,66	13,08	14,55						
JME-3SS-1500	Q	27	12 510	15 640	19 170	23 100	27 400	32 030	36 950	42 120	44 240			
		32	11 430	14 380	17 670	21 290	25 230	29 450	33 920	38 600	40 520			
		38	10 160	12 880	15 870	19 120	22 610	26 330	30 230					
	P	27	7,51	8,58	9,68	10,82	12,00	13,23	14,51	15,85	16,40			
		32	7,62	8,77	9,97	11,19	12,46	13,78	15,15	16,57	17,15			
		38	7,68	8,94	10,24	11,58	12,96	14,38	15,86					
JME-4SA-2000	Q	27	13 470	17 130	21 290	25 920	31 040	36 600	42 590	48 950	51 590			
		32	12 180	15 630	19 500	23 770	28 460	33 540	38 970	44 740				
		38	10 690	13 860	17 360	21 180	25 330	29 800						
	P	27	7,60	8,70	9,82	10,97	12,13	13,30	14,49	15,67	16,14			
		32	7,70	8,88	10,09	11,34	12,62	13,91	15,22	16,53				
		38	7,77	9,05	10,38	11,75	13,16	14,59						
JME-4SH-2500.10	Q	27	16 110	20 440	25 240	30 490	36 120	42 070	48 260	54 600	57 160			
		32	14 600	18 620	23 020	27 760	32 800	38 070	43 520	49 060	51 290			
		38	12 860	16 480	20 360	24 460	28 750	33 180						
	P	27	9,72	11,20	12,74	14,36	16,03	17,78	19,58	21,44	22,20			
		32	9,96	11,54	13,19	14,92	16,72	18,59	20,53	22,52	23,33			
		38	10,24	11,92	13,69	15,55	17,50	19,51						
JME-4SH-2500	Q	27	16 800	21 440	26 690	32 580	39 070	46 140	53 740	61 820	65 170			
		32	15 250	19 580	24 430	29 810	35 700	42 080	48 910	56 130	59 130			
		38	13 470	17 410	21 740	26 470	31 600	37 120						
	P	27	9,61	11,01	12,44	13,89	15,37	16,87	18,39	19,91	20,53			
		32	9,86	11,36	12,91	14,50	16,12	17,77	19,44	21,13	21,81			
		38	10,14	11,75	13,44	15,18	16,96	18,78						
JME-4SJ-3000.10	Q	27	18 870	23 900	29 460	35 480	41 870	48 520	55 300	62 090	64 780			
		32	17 060	21 770	26 890	32 350	38 070	43 950	49 880					
		38	14 910	19 190	23 730	28 470	33 330							
	P	27	11,16	13,14	15,26	17,50	19,86	22,34	24,94	27,64	28,75			
		32	11,31	13,41	15,64	18,01	20,50	23,12	25,84					
		38	11,44	13,66	16,03	18,54	21,18							
JME-4SJ-3000	Q	27	19 820	25 250	31 410	38 260	45 790	53 920	62 590	71 690	75 430			
		32	17 960	23 090	28 810	35 120	41 990	49 350	57 150	65 300	68 630			
		38	15 780	20 490	25 650	31 250	37 270	43 660	50 360					
	P	27	11,06	12,94	14,92	16,98	19,11	21,30	23,56	25,88	26,82			
		32	11,24	13,25	15,36	17,56	19,84	22,19	24,61	27,08	28,09			
		38	11,39	13,54	15,81	18,17	20,63	23,16	25,77					

Q [W] = Cooling Capacity[1)]
P [kW] = Power Input[1)]
[1)] Parameters based on suction return temperature 20°C
t_e [°C] = Evaporating Temperature
t_{11} [°C] = Ambient Temperature

Temperature applications: low medium high

R404A

Model		t_{ll} \ t_e	-30	-25	-20	-15	-10	-5	0	5	7	10	12,5	15
JME-6SH-3500.10	Q	27	23 750	29 980	36 920	44 510	52 670	61 320	70 360	79 680	83 470			
		32	21 510	27 330	33 710	40 600	47 950	55 670	63 680	71 900				
		38	18 920	24 200	29 870	35 880	42 190	48 750						
	P	27	14,32	17,02	19,74	22,48	25,21	27,92	30,58	33,18	34,20			
		32	14,51	17,34	20,21	23,11	26,00	28,87	31,70	34,47				
		38	14,70	17,67	20,71	23,77	26,85	29,92						
JME-6SH-3500	Q	27	24 410	30 950	38 340	46 550	55 550	65 290	75 690	86 660	91 180			
		32	22 130	28 260	35 080	42 580	50 750	59 520	68 840	78 640	82 680			
		38	19 510	25 090	31 190	37 800	44 910	52 480	60 460					
	P	27	14,26	16,89	19,52	22,13	24,70	27,20	29,62	31,94	32,83			
		32	14,46	17,23	20,02	22,80	25,54	28,23	30,85	33,36	34,33			
		38	14,66	17,58	20,54	23,51	26,46	29,37	32,21					
JME-6SJ-4000	Q	27	28 330	35 710	43 930	52 930	62 640	72 950	83 750	94 900	99 430			
		32	25 560	32 420	39 950	48 120	56 860	66 070	75 650	85 500	89 490			
		38	22 370	28 580	35 270	42 400	49 920	57 760						
	P	27	16,86	19,56	22,41	25,39	28,50	31,74	35,11	38,61	40,04			
		32	17,12	19,99	23,01	26,18	29,50	32,95	36,54	40,26	41,79			
		38	17,40	20,44	23,66	27,05	30,60	34,31						

Q [W] = Cooling Capacity[1)]
P [kW] = Power Input[1)]
[1)] Parameters based on suction return temperature 20°C
t_e [°C] = Evaporating Temperature
t_{ll} [°C] = Ambient Temperature

Temperature applications: low medium high

R404A

Model		t_{11} \ t_e	-50	-45	-40	-35	-30	-25	-20	-15	-10	-5	0	5
JLE-BP-100	Q	27		508	752	1 053	1 399	1 789	2 224	2 702	3 221	3 777		
		32		398	667	948	1 268	1 628	2 028	2 464	2 936	3 436		
		35		323	611	878	1 182	1 524	1 903	2 315	2 760	3 229		
		38		258	561	815	1 104	1 427	1 783	2 169	2 582			
	P	27		0,49	0,66	0,81	0,96	1,12	1,27	1,43	1,60	1,77		
		32		0,46	0,63	0,80	0,98	1,15	1,33	1,51	1,69	1,89		
		35		0,43	0,62	0,80	0,99	1,17	1,36	1,56	1,75	1,96		
		38		0,41	0,60	0,80	1,00	1,19	1,39	1,60	1,81			
JLE-BP-150	Q	27		609	901	1 240	1 627	2 062	2 543	3 068	3 631	4 226		
		32		526	801	1 117	1 475	1 876	2 317	2 794	3 302	3 835		
		35		471	735	1 036	1 377	1 757	2 174	2 625	3 102	3 601		
		38		422	676	962	1 286	1 644	2 035	2 455				
	P	27		0,60	0,79	0,97	1,14	1,32	1,50	1,68	1,86	2,05		
		32		0,57	0,77	0,96	1,16	1,35	1,56	1,75	1,95	2,16		
		35		0,55	0,75	0,96	1,17	1,38	1,59	1,79	2,01	2,22		
		38		0,54	0,74	0,96	1,17	1,40	1,62	1,84	2,06			
JLE-BP-200	Q	27		949	1 365	1 840	2 376	2 968	3 613	4 302	5 025	5 770		
		32		725	1 202	1 641	2 132	2 673	3 258	3 879	4 523	5 180		
		35		592	1 104	1 521	1 986	2 495	3 044	3 623	4 220			
		38		461	1 009	1 403	1 841	2 318	2 829	3 365				
	P	27		0,86	1,12	1,37	1,63	1,90	2,19	2,49	2,81	3,15		
		32		0,81	1,08	1,35	1,64	1,94	2,25	2,59	2,94	3,31		
		35		0,78	1,05	1,34	1,65	1,96	2,29	2,64	3,01			
		38		0,75	1,02	1,33	1,65	1,99	2,33	2,70				
JLE-BP-300	Q	27		1 387	1 983	2 687	3 480	4 352	5 290	6 276	7 283	8 279		
		32		1 082	1 754	2 409	3 141	3 939	4 787	5 667	6 551			
		35		865	1 593	2 218	2 913	3 667	4 464	5 286				
		38		673	1 448	2 043	2 701	3 409	4 152					
	P	27		1,17	1,54	1,92	2,32	2,75	3,20	3,69	4,22	4,81		
		32		1,09	1,48	1,89	2,33	2,80	3,29	3,82	4,41			
		35		1,03	1,43	1,88	2,34	2,83	3,35	3,90				
		38		0,97	1,39	1,86	2,34	2,86	3,40					
JLE-BP-340	Q	27		1 578	2 170	2 968	3 895	4 955	6 146	7 467	8 908	10 456		
		32		1 224	1 906	2 652	3 514	4 494	5 590	6 798	8 108	9 505		
		35		1 017	1 751	2 467	3 291	4 223	5 263	6 405	7 638	8 945		
		38		815	1 600	2 285	3 071	3 956	4 938	6 013	7 166	8 382		
	P	27		1,22	1,59	1,95	2,31	2,69	3,06	3,43	3,82	4,22		
		32		1,12	1,52	1,92	2,32	2,74	3,15	3,57	4,02	4,48		
		35		1,07	1,47	1,90	2,33	2,77	3,21	3,66	4,14	4,63		
		38		1,01	1,43	1,88	2,33	2,80	3,27	3,75	4,25	4,78		
JLE-BP-400	Q	27		2 210	3 013	4 047	5 219	6 533	7 971	9 537	11 212	12 974		
		32		1 697	2 687	3 643	4 724	5 932	7 245	8 669	10 183	11 765		
		35		1 397	2 495	3 405	4 430	5 574	6 812	8 150	9 565	11 035		
		38		1 093	2 301	3 165	4 135	5 215	6 378	7 630	8 948			
	P	27		1,73	2,20	2,66	3,15	3,64	4,16	4,68	5,22	5,78		
		32		1,69	2,17	2,67	3,20	3,74	4,30	4,88	5,48	6,10		
		35		1,66	2,16	2,68	3,23	3,79	4,38	4,99	5,63	6,29		
		38		1,63	2,14	2,68	3,26	3,85	4,46	5,11	5,78			

Q [W] = Cooling Capacity[1)]
P [kW] = Power Input[1)]
[1)] Parameters based on suction return temperature 20°C
t_e [°C] = Evaporating Temperature
t_{11} [°C] = Ambient Temperature

Temperature applications: low medium high

R404A

Model		t_{ll} \ t_e	-50	-45	-40	-35	-30	-25	-20	-15	-10	-5	0	5
JLE-BP-500	Q	27		2 524	3 522	4 743	6 116	7 636	9 293	11 069	12 943	14 884		
		32		1 926	3 151	4 281	5 547	6 942	8 456	10 070	11 761	13 499		
		35		1 575	2 932	4 008	5 209	6 529	7 955	9 468	11 046	12 658		
		38		1 221	2 712	3 733	4 870	6 114	7 453	8 867	10 334	11 823		
	P	27		2,08	2,71	3,36	4,01	4,68	5,36	6,07	6,81	7,56		
		32		2,01	2,68	3,39	4,10	4,83	5,59	6,36	7,16	7,98		
		35		1,97	2,67	3,40	4,15	4,92	5,72	6,53	7,38	8,24		
		38		1,92	2,65	3,42	4,21	5,02	5,86	6,71	7,59	8,49		
JLE-BP-600	Q	27		3 108	4 329	5 767	7 368	9 121	11 003	12 988	15 039	17 115		
		32		2 362	3 886	5 208	6 673	8 267	9 968	11 746	13 569			
		35		1 905	3 616	4 870	6 254	7 755	9 351	11 012				
		38		1 465	3 354	4 538	5 841	7 245	8 730					
	P	27		2,55	3,19	3,87	4,58	5,32	6,10	6,93	7,80	8,73		
		32		2,50	3,18	3,90	4,65	5,44	6,28	7,17	8,11			
		35		2,47	3,17	3,91	4,70	5,52	6,39	7,31				
		38		2,44	3,16	3,92	4,74	5,59	6,49					
JLE-BP-620	Q	27		3 264	4 462	5 993	7 727	9 664	11 795	14 104	16 568	19 157		
		32		2 509	4 015	5 428	7 023	8 798	10 741	12 836	15 060	17 379		
		35		2 060	3 748	5 091	6 603	8 279	10 109	12 073	14 150	16 304		
		38		1 615	3 483	4 756	6 184	7 762	9 478	11 311	13 240			
	P	27		2,56	3,20	3,86	4,54	5,24	5,96	6,71	7,49	8,29		
		32		2,51	3,18	3,89	4,62	5,37	6,15	6,96	7,80	8,67		
		35		2,48	3,18	3,90	4,66	5,44	6,25	7,10	7,99	8,90		
		38		2,45	3,17	3,92	4,71	5,52	6,36	7,25	8,17			

Q [W] = Cooling Capacity[1)]
P [kW] = Power Input[1)]
[1)] Parameters based on suction return temperature 20°C
t_e [°C] = Evaporating Temperature
t_{ll} [°C] = Ambient Temperature

Temperature applications: low medium high

R404A

Model		t_{11} \ t_e	-25	-20	-18	-15	-10	-5	0	5	7,5	10	12,5	15
JME-ESH-125	Q	27			11 890	13 220	15 610	18 230	21 070	24 100	25 680			
		32			11 000	12 230	14 450	16 850	19 440	22 200	23 640			
		38			9 900	11 020	13 010	15 150	17 440					
	P	27			6,11	6,26	6,53	6,82	7,13	7,48	7,66			
		32			6,83	6,98	7,26	7,56	7,89	8,25	8,44			
		38			7,79	7,95	8,23	8,54	8,88					
JME-ESH-150	Q	27			14 930	16 650	19 790	23 290	27 150	31 360	33 590			
		32			13 860	15 470	18 400	21 640	25 210	29 090	31 140			
		38			12 570	14 040	16 700	19 620	22 820	26 280	28 110			
	P	27			6,84	6,97	7,21	7,46	7,73	8,03	8,18			
		32			7,65	7,79	8,03	8,30	8,59	8,90	9,07			
		38			8,73	8,87	9,13	9,41	9,72	10,05	10,23			
JME-ESH-170	Q	27			17 980	20 050	23 850	28 090	32 780	37 900	40 620			
		32			16 700	18 640	22 180	26 120	30 440	35 170	37 670			
		38			15 150	16 930	20 150	23 690	27 580	31 800	34 030			
	P	27			8,17	8,32	8,59	8,88	9,19	9,53	9,71			
		32			9,13	9,29	9,57	9,88	10,22	10,58	10,77			
		38			10,42	10,58	10,88	11,21	11,56	11,95	12,16			
JME-ESH-185	Q	27			21 020	23 410	27 760	32 590	37 870	43 590	46 610			
		32			19 480	21 720	25 770	30 220	35 080	40 330	43 090			
		38			17 620	19 660	23 310	27 300	31 630	36 290	38 730			
	P	27			10,08	10,29	10,67	11,08	11,53	12,02	12,27			
		32			11,27	11,49	11,89	12,32	12,79	13,30	13,57			
		38			12,86	13,09	13,50	13,96	14,45	14,99	15,28			

Q [W] = Cooling Capacity[1)]
P [kW] = Power Input[1)]
[1)] Parameters based on suction return temperature 20°C
t_e [°C] = Evaporating Temperature
t_{11} [°C] = Ambient Temperature

Technical data

Technical specification

Model	Compressor	Condenser				Receiver	Sound power LWA [dBA]	Sound pressure LPA at 5 m [dBA]
		Type	Air flow [m³/h]	Number of fans	Fan diameter	Volume [dm³]		
JHE-D-05	SC 10DLX	KN02	800	1	254	1,5	47	-
JHE-D-07	SC 12DLX	KN02	800	1	254	1,5	50	-
JHE-D-09	SC 15DLX	KN09	1 200	1	300	1,5	55	-
JME-D-10	SC 18CLX	KN02	800	1	254	1,5	56	-

Electrical data

Model	Compressor			Condenser	
	Voltage	MOC [A]	LRC [A]	Voltage	Total current [A]
JHE-D-05	230V - 1f - 50Hz	3	14,8	230V - 1f - 50Hz	0,5
JHE-D-07	230V - 1f - 50Hz	3,9	18,6	230V - 1f - 50Hz	0,5
JHE-D-09	230V - 1f - 50Hz	3,7	21,8	230V - 1f - 50Hz	0,5
JME-D-10	230V - 1f - 50Hz	5	18,6	230V - 1f - 50Hz	0,5

MOC [A] = Maximum operation current
LRC [A] = Locked rotor current

Dimensions

Model	Outside dimensions			Fixing dimensions			Connection		Weight [kg]
	A [mm]	B [mm]	C [mm]	D [mm]	E [mm]	Holes	Suction [“/mm]	Liquid [“/mm]	
JHE-D-05	350	520	305	225	320	4x7	⅜ / 10	¼ / 6	26
JHE-D-07	350	520	305	225	320	4x7	⅜ / 10	¼ / 6	29
JHE-D-09	385	540	360	355	390	4x7	½ / 12	¼ / 6	39
JME-D-10	350	520	305	225	320	4x7	⅜ / 10	¼ / 6	29

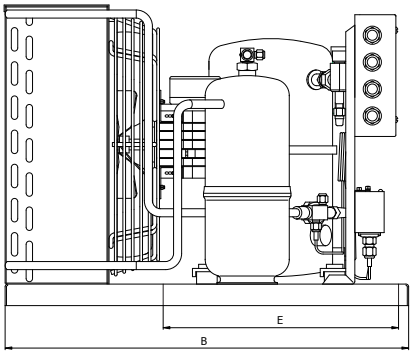

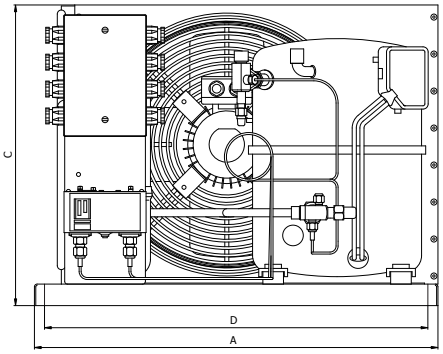

Technical specification

Model	Compressor	Condenser				Receiver	Sound power LWA [dBA]	Sound pressure LPA at 5 m [dBA]
		Type	Air flow [m³/h]	Number of fans	Fan diameter	Volume [dm³]		
JME-E-13	MX 21TB	KN02	800	1	254	1,5	-	-
JME-E-15	MS 26TB	KN09	1200	1	300	1,5	-	-
JHE-E-13	MX 21TB	KN09	1200	1	300	1,5	-	-
JHE-E-15	MS 26TB	18-2V	1400	2	254	3,4	-	-

Electrical data

Model	Compressor			Condenser	
	Voltage	MOC [A]	LRC [A]	Voltage	Total current [A]
JME-E-13	230V - 1f - 50Hz	5	32	230V - 1f - 50Hz	0,5
JME-E-15	230V - 1f - 50Hz	6,3	38	230V - 1f - 50Hz	0,5
JHE-E-13	230V - 1f - 50Hz	5	32	230V - 1f - 50Hz	0,5
JHE-E-15	230V - 1f - 50Hz	6,3	38	230V - 1f - 50Hz	1

MOC [A] = Maximum operation current
LRC [A] = Locked rotor current

Dimensions

Model	Outside dimensions			Fixing dimensions			Connection		Weight [kg]
	A [mm]	B [mm]	C [mm]	D [mm]	E [mm]	Holes	Suction [“/mm]	Liquid [“/mm]	
JME-E-13	350	520	305	225	320	4x7	½ / 12	¼ / 6	38
JME-E-15	385	540	360	355	390	4x7	½ / 12	¼ / 6	43
JHE-E-13	385	540	360	355	390	4x7	½ / 12	¼ / 6	39
JHE-E-15	700	500	395	660	330	4x15	½ / 12	¼ / 6	46

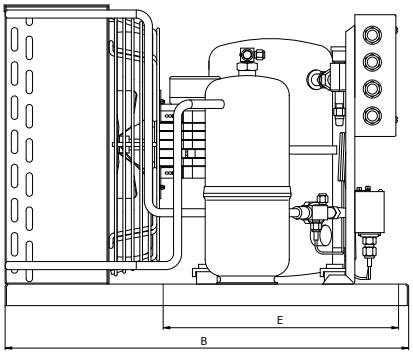

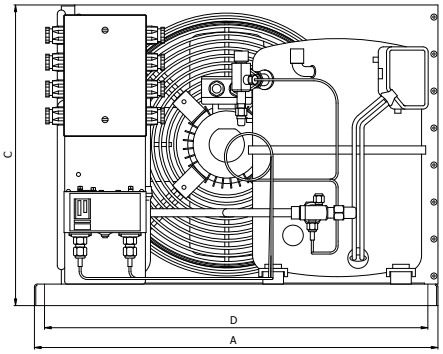

Technical specification

Model	Compressor	Condenser				Receiver	Sound power LWA [dBA]	Sound pressure LPA at 5 m [dBA]
		Type	Air flow [m³/h]	Number of fans	Fan diameter	Volume [dm³]		
JMM-M-18E	MT-18	18-1V	2 400	1	350	3,5	72	50
JMM-M-18	MT-18	18-1V	2 400	1	350	3,5	72	50
JMM-M-28	MT-28	28-1V	2 160	1	350	3,5	69	47
JMM-M-40	MT-40	40-2V	2 600	2	300	6,8	67	45
JMM-M-64	MT-64	64-2V	3 600	2	350	6,8	73	51
JMM-M-80	MT-80	80-2V	5 400	2	400	11,0	76	54
JMM-M-100	MT-100	100-2V	9 000	2	450	11,0	82	60
JMM-M-125	MT-125	125-2V	7 250	2	450	11,0	83	61
JME-M-18E	MTZ-18	18-1V	2 400	1	350	3,5	72	50
JME-M-18	MTZ-18	18-1V	2 400	1	350	3,5	72	50
JME-M-28	MTZ-28	28-1V	2 160	1	350	3,5	69	47
JME-M-40	MTZ-40	40-2V	2 600	2	300	6,8	67	45
JME-M-64	MTZ-64	64-2V	3 600	2	350	6,8	73	51
JME-M-80	MTZ-80	80-2V	5 400	2	400	6,8	76	54
JME-M-100	MTZ-100	100-2V	9 000	2	450	11,0	82	60
JME-M-125	MTZ-125	125-2V	7 250	2	450	11,0	83	61

Electrical data

Model	Compressor				Condenser	
	Voltage	MOC [A]	LRC [A]	Crankcase heater [W]	Voltage	Total current [A]
JMM / JME-M-18E	230V – 1f – 50Hz	12	41	35	230V – 1f – 50Hz	1,2
JMM / JME-M-18	400V – 3f – 50Hz	5	16	35	230V – 1f – 50Hz	1,2
JMM / JME-M-28	400V – 3f – 50Hz	7,5	23	35	230V – 1f – 50Hz	1,2
JMM / JME-M-40	400V – 3f – 50Hz	10	38	35	230V – 1f – 50Hz	2,4
JMM / JME-M-64	400V – 3f – 50Hz	15	67	35	230V – 1f – 50Hz	2,4
JMM / JME-M-80	400V – 3f – 50Hz	18	80	35	230V – 1f – 50Hz	2,6
JMM / JME-M-100	400V – 3f – 50Hz	22	78,5	35	230V – 1f – 50Hz	3,4
JMM / JME-M-125	400V – 3f – 50Hz	27	105	35	230V – 1f – 50Hz	3,4

MOC [A] = Maximum operation current
LRC [A] = Locked rotor current

Dimensions

Model	Outside dimensions			Fixing dimensions			Connection		Weight [kg]
	A [mm]	B [mm]	C [mm]	D [mm]	E [mm]	Holes	Suction [“/mm]	Liquid [“/mm]	
JMM / JME-M-18E	600	600	455	560	380	4x9	½ / 12	⅜ / 10	48
JMM / JME-M-18	600	600	455	560	380	4x9	½ / 12	⅜ / 10	48
JMM / JME-M-28	600	600	455	560	380	4x9	½ / 12	⅜ / 10	51
JMM / JME-M-40	800	600	442	760	400	4x9	⅝ / 16	½ / 12	68
JMM / JME-M-64	1 000	700	555	960	400	4x9	⅞ / 22	½ / 12	99
JMM / JME-M-80	1 000	700	555	960	400	4x9	⅞ / 22	½ / 12	115
JMM / JME-M-100	1 200	800	676	1 160	500	4x9	⅞ / 22	½ / 12	145
JMM / JME-M-125	1 200	800	676	1 160	500	4x9	⅞ / 22	⅝ / 16	154

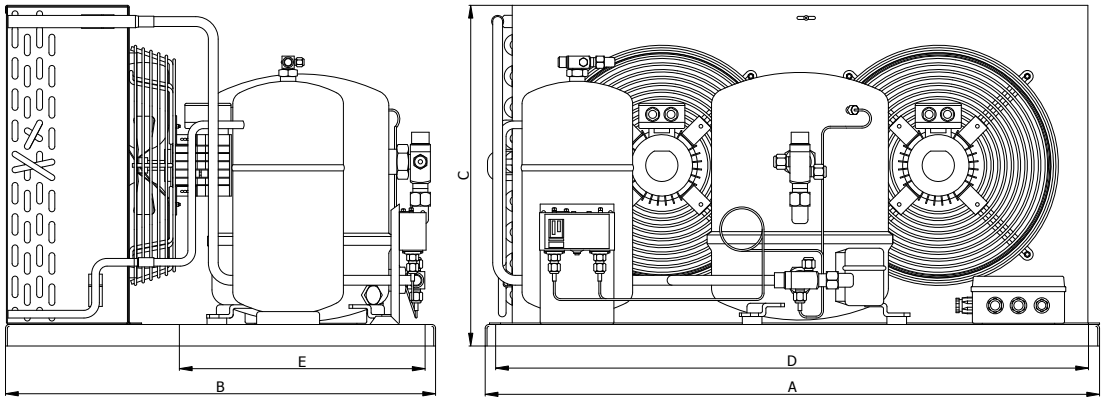

Technical specification

Model	Compressor	Condenser				Receiver	Sound power LWA [dBA]	Sound pressure LPA at 5 m [dBA]
		Type	Air flow [m³/h]	Number of fans	Fan diameter	Volume [dm³]		
JMM-SM-125	SM 125	125 - 2V	7 250	2	450	11	79	57
JHM-SM-125	SM 125	200 - 2V	17 000	2	550	13	85	63
JMM-SM-185	SM 185	200 - 2V	24 000	2	600	13	85	63
JHM-SM-185	SM 185	250 - 4V	30 000	4	550	24,5	88	66
JMM-SM-250	2 x SM 125	250 - 4V	30 000	4	550	24,5	82	60
JMM-SM-370	2 x SM 185	250 - 4V	44 000	4	600	24,5	85	63
JME-SM-125	SZ 125	125 - 2V	7 250	2	450	11	80	58
JHE-SM-125	SZ 125	200 - 2V	17 000	2	550	13	86	64
JME-SM-185	SZ 185	200 - 2V	24 000	2	600	13	86	64
JHE-SM-185	SZ 185	250 - 4V	30 000	4	550	24,5	89	67
JME-SM-250	2 x SZ 125	250 - 4V	30 000	4	550	24,5	83	61
JME-SM-370	2 x SZ 185	250 - 4V	44 000	4	600	24,5	86	64

Electrical data

Model	Compressor				Condenser	
	Voltage	MOC [A]	LRC [A]	Crankcase heater [W]	Voltage	Total current [A]
JMM / JME-SM-125	400V – 3f – 50Hz	25	120	-	230V – 1f – 50Hz	2,2
JHM / JHE-SM-125	400V – 3f – 50Hz	25	120	-	400V – 3f – 50Hz	4,4
JMM / JME-SM-185	400V – 3f – 50Hz	35	175	-	400V – 3f – 50Hz	5,8
JHM / JHE-SM-185	400V – 3f – 50Hz	35	175	-	400V – 3f – 50Hz	8,8
JMM / JME-SM-250	400V – 3f – 50Hz	2 x 25	2 x 120	-	400V – 3f – 50Hz	8,8
JMM / JME-SM-370	400V – 3f – 50Hz	2 x 35	2 x 175	-	400V – 3f – 50Hz	11,6

MOC [A] = Maximum operation current
LRC [A] = Locked rotor current

Dimensions

Model	Outside dimensions			Fixing dimensions			Connection		Weight [kg]
	A [mm]	B [mm]	C [mm]	D [mm]	E [mm]	Holes	Suction [“/mm]	Liquid [“/mm]	
JMM / JME–SM-125	1 200	800	676	1 160	500	4x9	1⅜ / 35	½ / 12	167
JHM / JHE–SM-125	1 800	1 100	1 170	1 760	700	4x9	1⅜ / 35	⅝ / 16	150
JMM / JME–SM-185	1 800	1 100	1 170	1 760	700	4x9	1⅝ / 42	⅝ / 16	205
JHM / JHE–SM-185	1 800	1 100	1 870	1 760	700	4x9	1⅝ / 42	⅞ / 22	225
JMM / JME–SM-250	1 800	1 100	1 870	1 760	700	4x9	1⅝ / 42	⅞ / 22	300
JMM / JME–SM-370	1 800	1 100	1 870	1 760	700	4x9	1⅝ / 42	⅞ / 22	350

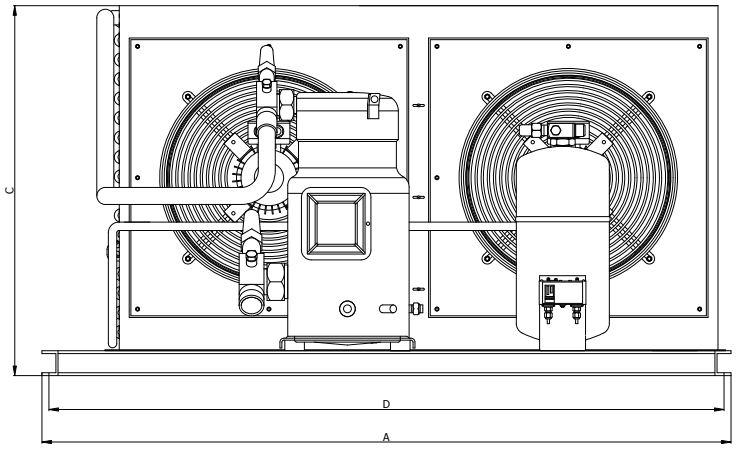

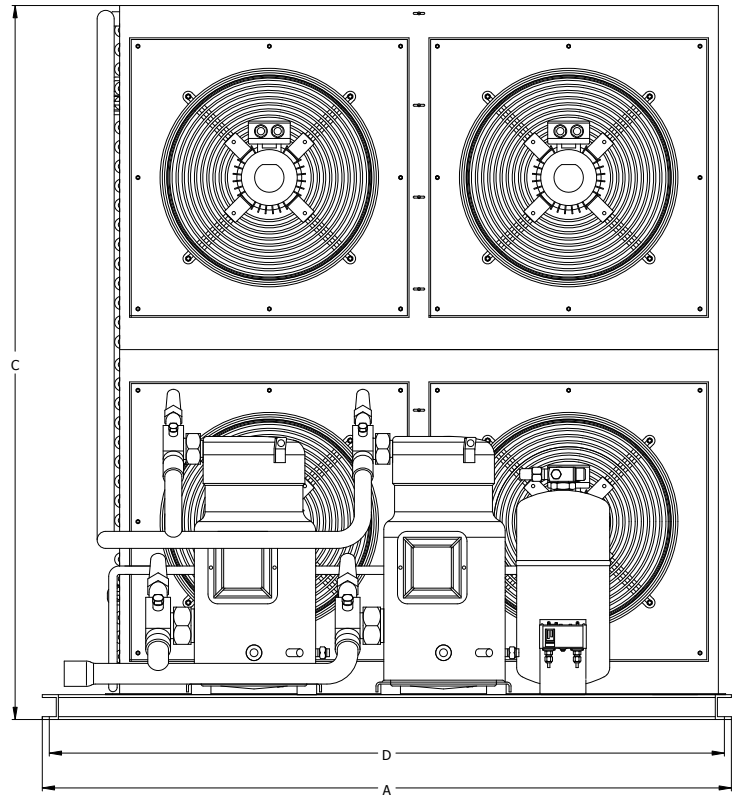

Technical specification

Model	Compressor	Condenser				Receiver	Sound power LWA [dBA]	Sound pressure LPA at 5 m [dBA]
		Type	Air flow [m³/h]	Number of fans	Fan diameter	Volume [dm³]		
JME-ZR-18E	ZR18 K4E	18 - 1V	2 500	1	350	3,4	67	45
JME-ZR-28	ZR28 K3E	28 - 1V	2 160	1	350	3,4	67	45
JME-ZR-40	ZR40 K3E	40 - 2V	2 500	2	300	6,7	66	44
JME-ZR-64	ZR61 KCE	64 - 2V	4 100	2	350	6,7	72	50
JME-ZR-80	ZR72 KCE	80 - 2V	4 800	2	400	6,7	75	53
JME-ZR-100	ZR94 KCE	100 - 2V	8 000	2	450	11,0	79	57
JME-ZR-125	ZR108 KCE	125 - 2V	7 250	2	450	11,0	80	58
JME-ZR-160	ZR160 KCE	160 - 2V	14 000	2	500	13,0	84	62
JME-ZR-185	ZR190 KCE	200 - 2V	24 000	2	600	13,0	85	63
JME-ZR-250	ZR250 KCE	200 - 2V	24 000	2	600	24,5	87	65
JME-ZR-310	ZR310 KCE	250 - 4V	30 000	4	550	24,5	88	66
JME-ZR-370	2 x ZR19 M3E	250 - 4V	44 000	4	600	24,5	88	66

Electrical data

Model	Compressor				Condenser	
	Voltage	MOC [A]	LRC [A]	Crankcase heater [W]	Voltage	Total current [A]
JME-ZR-18E	230V – 1f – 50Hz	10	35	70	230V – 1f – 50Hz	0,58
JME-ZR-28	400V – 3f – 50Hz	5,1	32	70	230V – 1f – 50Hz	0,58
JME-ZR-40	400V – 3f – 50Hz	7	46	70	230V – 1f – 50Hz	0,64
JME-ZR-64	400V – 3f – 50Hz	12,4	65,5	70	230V – 1f – 50Hz	1,16
JME-ZR-80	400V – 3f – 50Hz	12,1	74	70	230V – 1f – 50Hz	1,46
JME-ZR-100	400V – 3f – 50Hz	17	99	70	230V – 1f – 50Hz	2,2
JME-ZR-125	400V – 3f – 50Hz	20	123	70	230V – 1f – 50Hz	2,2
JME-ZR-160	400V – 3f – 50Hz	27	167	70	400V – 3f – 50Hz	2,4
JME-ZR-185	400V – 3f – 50Hz	32	198	70	400V – 3f – 50Hz	6
JME-ZR-250	400V – 3f – 50Hz	40	225	120	400V – 3f – 50Hz	6
JME-ZR-310	400V – 3f – 50Hz	52	272	150	400V – 3f – 50Hz	8,8
JME-ZR-370	400V – 3f – 50Hz	2 x 32	2 x 198	2 x 70	400V – 3f – 50Hz	12

MOC [A] = Maximum operation current
LRC [A] = Locked rotor current

Dimensions

Model	Outside dimensions			Fixing dimensions			Connection		Weight [kg]
	A [mm]	B [mm]	C [mm]	D [mm]	E [mm]	Holes	Suction [“/mm]	Liquid [“/mm]	
JME-ZR-18E	600	600	480	560	380	4x9	⅝ / 16	⅜ / 10	58
JME-ZR-28	600	600	480	560	380	4x9	⅝ / 18	⅜ / 10	59
JME-ZR-40	800	600	520	760	400	4x9	⅞ / 22	½ / 12	69
JME-ZR-64	1 000	700	560	960	400	4x9	1⅛ / 28	½ / 12	94
JME-ZR-80	1 000	700	560	960	400	4x9	1⅛ / 28	½ / 12	117
JME-ZR-100	1 200	800	680	1 160	500	4x9	1⅛ / 28	⅝ / 16	142
JME-ZR-125	1 200	800	680	1 160	500	4x9	1⅜ / 35	⅝ / 16	157
JME-ZR-160	1 800	1 100	1 170	1 760	700	4x9	1⅜ / 35	⅝ / 16	190
JME-ZR-185	1 800	1 100	1 170	1 760	700	4x9	1⅜ / 35	⅝ / 18	205
JME-ZR-250	1 800	1 100	1 170	1 760	700	4x9	1⅜ / 35	⅞ / 22	300
JME-ZR-310	1 800	1 100	1 870	1 760	700	4x9	1⅝ / 42	⅞ / 22	340
JME-ZR-370	1 800	1 100	1 870	1 760	700	4x9	2⅛ / 54	⅞ / 22	350

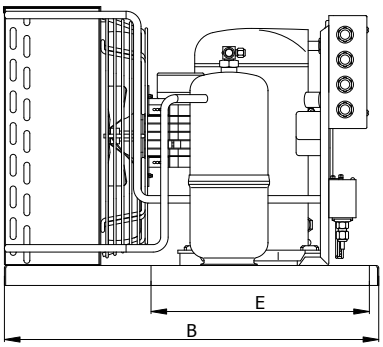

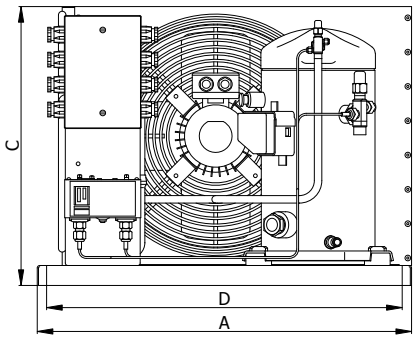

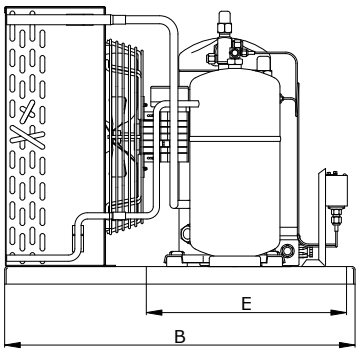

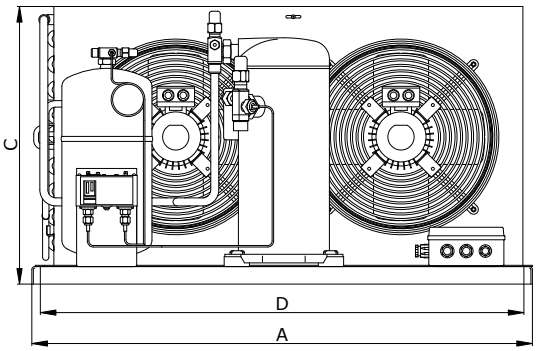

Technical specification

Model	Compressor	Condenser				Receiver	Sound power LWA [dBA]	Sound pressure LPA at 5 m [dBA]
		Type	Air flow [m³/h]	Number of fans	Fan diameter	Volume [dm³]		
JHE-ZR-18E	ZR18 K4E	28 - 1V	2 160	1	350	3,4	67	45
JHE-ZR-28	ZR28 K3E	40 - 2V	2 500	2	300	6,7	66	44
JHE-ZR-40	ZR40 K3E	64 - 2V	4 100	2	350	6,7	69	47
JHE-ZR-64	ZR61 KCE	80 - 2V	4 800	2	400	6,7	74	52
JHE-ZR-80	ZR72 KCE	100 - 2V	8 000	2	450	11,0	77	55
JHE-ZR-100	ZR94 KCE	125 - 2V	7 250	2	450	11,0	79	57
JHE-ZR-125	ZR108 KCE	160 - 2V	14 000	2	500	13,0	85	63
JHE-ZR-160	ZR160 KCE	200 - 2V	24 000	2	600	13,0	85	63
JHE-ZR-185	ZR190 KCE	250 - 4V	30 000	4	550	24,5	85	63

Electrical data

Model	Compressor				Condenser	
	Voltage	MOC [A]	LRC [A]	Crankcase heater [W]	Voltage	Total current [A]
JHE-ZR-18E	230V – 1f – 50Hz	10	35	70	230V – 1f – 50Hz	0,58
JHE-ZR-28	400V – 3f – 50Hz	5,1	32	70	230V – 1f – 50Hz	0,64
JHE-ZR-40	400V – 3f – 50Hz	7	46	70	230V – 1f – 50Hz	1,16
JHE-ZR-64	400V – 3f – 50Hz	12,4	65,5	70	230V – 1f – 50Hz	1,46
JHE-ZR-80	400V – 3f – 50Hz	12,1	74	70	230V – 1f – 50Hz	2,2
JHE-ZR-100	400V – 3f – 50Hz	17	99	70	230V – 1f – 50Hz	2,2
JHE-ZR-125	400V – 3f – 50Hz	20	123	70	400V – 3f – 50Hz	2,4
JHE-ZR-160	400V – 3f – 50Hz	27	167	70	400V – 3f – 50Hz	6
JHE-ZR-185	400V – 3f – 50Hz	32	198	70	400V – 3f – 50Hz	8,8

MOC [A] = Maximum operation current
LRC [A] = Locked rotor current

Dimensions

Model	Outside dimensions			Fixing dimensions			Connection		Weight [kg]
	A [mm]	B [mm]	C [mm]	D [mm]	E [mm]	Holes	Suction [“/mm]	Liquid [“/mm]	
JHE-ZR-18E	600	600	480	560	380	4x9	⅝ / 16	⅜ / 10	59
JHE-ZR-28	800	600	520	760	400	4x9	⅝ / 16	⅜ / 10	67
JHE-ZR-40	1 000	700	560	960	400	4x9	⅞ / 22	½ / 12	90
JHE-ZR-64	1 000	700	560	960	400	4x9	1⅛ / 28	½ / 12	104
JHE-ZR-80	1 200	800	680	1 160	500	4x9	1⅛ / 28	½ / 12	127
JHE-ZR-100	1 200	800	680	1 160	500	4x9	1⅛ / 28	⅝ / 16	164
JHE-ZR-125	1 800	1 100	1 170	1 760	700	4x9	1⅜ / 35	⅝ / 16	183
JHE-ZR-160	1 800	1 100	1 170	1 760	700	4x9	1⅜ / 35	⅝ / 18	200
JHE-ZR-185	1 800	1 100	1 870	1 760	700	4x9	1⅜ / 35	⅝ / 18	225

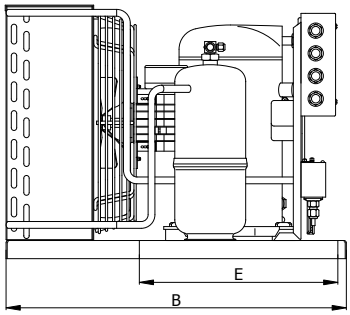

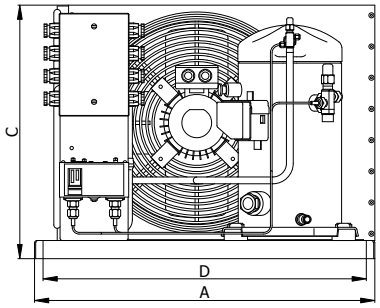

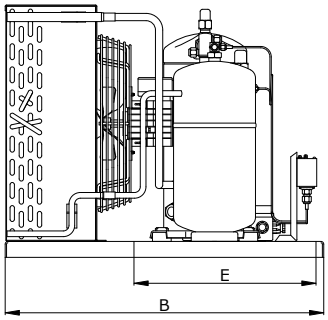

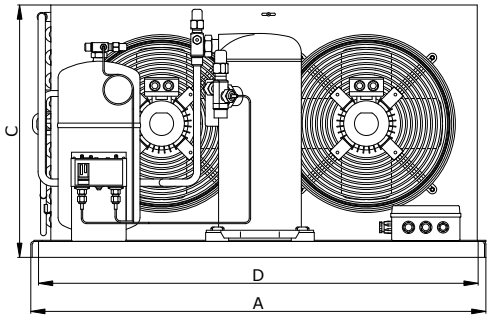

Technical specification

Model	Compressor	Condenser				Receiver	Sound power LWA [dBA]	Sound pressure LPA at 5 m [dBA]
		Type	Air flow [m³/h]	Number of fans	Fan diameter	Volume [dm³]		
JME-ZB-15	ZB15 KCE-TFD	28-1V	2 160	1	350	3,4	70	48
JME-ZB-19	ZB19 KCE-TFD	40-2V	2 500	2	300	6,7	70	48
JME-ZB-21	ZB21 KCE-TFD	40-2V	2 500	2	300	6,7	70	48
JME-ZB-26	ZB26 KCE-TFD	64-2V	4 100	2	350	6,7	74	52
JME-ZB-30	ZB30 KCE-TFD	64-2V	4 100	2	350	6,7	75	53
JME-ZB-38	ZB38 KCE-TFD	80-2V	4 800	2	400	6,7	76	54
JME-ZB-45	ZB45 KCE-TFD	80-2V	4 800	2	400	11,0	79	57
JME-ZB-56	ZB56 KCE-TWD	100-2V	8 000	2	450	11,0	82	60
JME-ZB-75	ZB75 KCE-TWD	125-2V	7 250	2	450	13,0	84	62
JME-ZB-92	ZB95 KCE-TWD	160-2V	14 000	2	500	13,0	86	64
JME-ZB-110	ZB114 KCE-TWD	200-2V	14 000	2	500	13,0	86	64

Electrical data

Model	Compressor				Condenser	
	Voltage	MOC [A]	LRC [A]	Crankcase heater [W]	Voltage	Total current [A]
JME-ZB-15	400V – 3f – 50Hz	4,9	26	70	230V – 1f – 50Hz	0,58
JME-ZB-19	400V – 3f – 50Hz	6,5	32	70	230V – 1f – 50Hz	0,64
JME-ZB-21	400V – 3f – 50Hz	7,2	40	70	230V – 1f – 50Hz	0,64
JME-ZB-26	400V – 3f – 50Hz	8,9	46	70	230V – 1f – 50Hz	1,16
JME-ZB-30	400V – 3f – 50Hz	10,3	49,3	70	230V – 1f – 50Hz	1,16
JME-ZB-38	400V – 3f – 50Hz	12,8	65,5	70	230V – 1f – 50Hz	1,16
JME-ZB-45	400V – 3f – 50Hz	13,1	74	70	230V – 1f – 50Hz	1,46
JME-ZB-56	400V – 3f – 50Hz	15,4	99	70	230V – 1f – 50Hz	2,2
JME-ZB-75	400V – 3f – 50Hz	21,7	127	70	230V – 1f – 50Hz	2,2
JME-ZB-92	400V – 3f – 50Hz	25,1	167	70	400V – 3f – 50Hz	3,6
JME-ZB-110	400V – 3f – 50Hz	29,2	198	70	400V – 3f – 50Hz	3,6

MOC [A] = Maximum operation current
LRC [A] = Locked rotor current

Dimensions

Model	Outside dimensions			Fixing dimensions			Connection		Weight [kg]
	A [mm]	B [mm]	C [mm]	D [mm]	E [mm]	Holes	Suction [“/mm]	Liquid [“/mm]	
JME-ZB-15	600	600	480	560	380	4x9	⅞ / 22	⅜ / 10	90
JME-ZB-19	800	600	450	760	400	4x9	⅞ / 22	½ / 12	93
JME-ZB-21	800	600	450	760	400	4x9	⅞ / 22	½ / 12	94
JME-ZB-26	1 000	700	555	960	400	4x9	⅞ / 22	½ / 12	96
JME-ZB-30	1 000	700	555	960	400	4x9	⅞ / 22	½ / 12	98
JME-ZB-38	1 000	700	555	960	400	4x9	⅞ / 22	½ / 12	99
JME-ZB-45	1 000	700	555	960	400	4x9	⅞ / 22	½ / 12	110
JME-ZB-56	1 200	800	680	1 160	500	4x9	1⅛ / 28	½ / 12	124
JME-ZB-75	1 200	800	680	1 160	500	4x9	1⅜ / 35	⅝ / 16	148
JME-ZB-92	1 800	1 100	1 170	1 760	700	4x9	1⅜ / 35	⅝ / 16	163
JME-ZB-110	1 800	1 100	1 170	1 760	700	4x9	1⅝ / 42	⅝ / 16	172

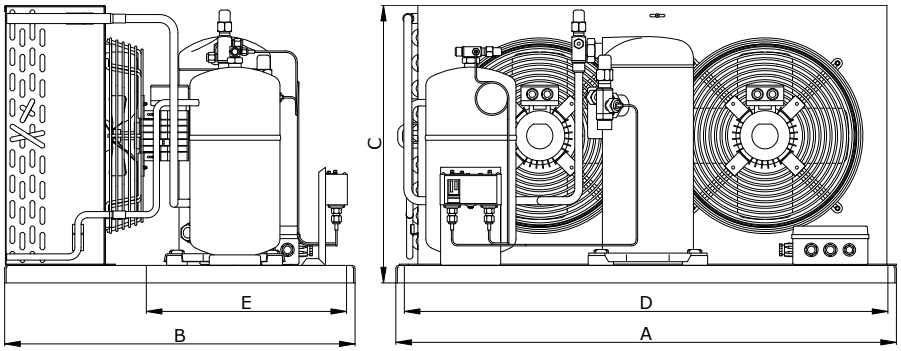

Technical specification

Model	Compressor	Condenser				Receiver	Sound power LWA [dBA]	Sound pressure LPA at 5 m [dBA]
		Type	Air flow [m³/h]	Number of fans	Fan diameter	Volume [dm³]		
JLE-ZF-09	ZF09 K4E	18 - 1V	2 400	1	350	3,5	72	50
JLE-ZF-11	ZF11 K4E	28 - 1V	2 160	1	350	3,5	73	51
JLE-ZF-13	ZF13 K4E	28 - 1V	2 160	1	350	3,5	74	52
JLE-ZF-15	ZF15 K4E	40 - 2V	2 600	2	300	6,7	75	53
JLE-ZF-18	ZF18 K4E	64 - 2V	3 600	2	350	11,0	79	57
JLE-ZF-24	ZF24 K4E	80 - 2V	5 400	2	400	11,0	82	60
JLE-ZF-33	ZF33 K4E	100 - 2V	8 000	2	450	11,0	84	62
JLE-ZF-40	ZF40 K4E	125 - 2V	7 250	2	450	11,0	84	62
JLE-ZF-48	ZF48 K4E	125 - 2V	7 250	2	450	11,0	84	62

Electrical data

Model	Compressor				Condenser	
	Voltage	MOC [A]	LRC [A]	Crankcase heater [W]	Voltage	Total current [A]
JLE-ZF-09	400V – 3f – 50Hz	6	40	70	230V – 1f – 50Hz	0,58
JLE-ZF-11	400V – 3f – 50Hz	7	46	70	230V – 1f – 50Hz	0,58
JLE-ZF-13	400V – 3f – 50Hz	8	51,5	70	230V – 1f – 50Hz	0,58
JLE-ZF-15	400V – 3f – 50Hz	10	64	70	230V – 1f – 50Hz	0,64
JLE-ZF-18	400V – 3f – 50Hz	12	74	70	230V – 1f – 50Hz	1,16
JLE-ZF-24	400V – 3f – 50Hz	16,1	99	70	230V – 1f – 50Hz	1,46
JLE-ZF-33	400V – 3f – 50Hz	22,3	127	70	230V – 1f – 50Hz	2,2
JLE-ZF-40	400V – 3f – 50Hz	25,1	167	70	230V – 1f – 50Hz	2,2
JLE-ZF-48	400V – 3f – 50Hz	30,6	187	70	230V – 1f – 50Hz	2,2

MOC [A] = Maximum operation current
LRC [A] = Locked rotor current

Dimensions

Model	Outside dimensions			Fixing dimensions			Connection		Weight [kg]
	A [mm]	B [mm]	C [mm]	D [mm]	E [mm]	Holes	Suction [“/mm]	Liquid [“/mm]	
JLE-ZF-09	600	600	460	560	380	4x9	5/8 / 16	3/8 / 10	60
JLE-ZF-11	600	600	520	560	380	4x9	5/8 / 16	3/8 / 10	63
JLE-ZF-13	600	600	560	560	380	4x9	5/8 / 16	3/8 / 10	72
JLE-ZF-15	800	600	560	760	400	4x9	7/8 / 22	1/2 / 12	94
JLE-ZF-18	1 000	700	560	960	400	4x9	7/8 / 22	1/2 / 12	99
JLE-ZF-24	1 000	700	640	960	400	4x9	1 1/8 / 28	1/2 / 12	110
JLE-ZF-33	1 200	800	680	1 160	500	4x9	1 1/8 / 28	5/8 / 16	124
JLE-ZF-40	1 200	800	680	1 160	500	4x9	1 3/8 / 35	5/8 / 16	148
JLE-ZF-48	1 200	800	690	1 160	500	4x9	1 5/8 / 42	5/8 / 16	157

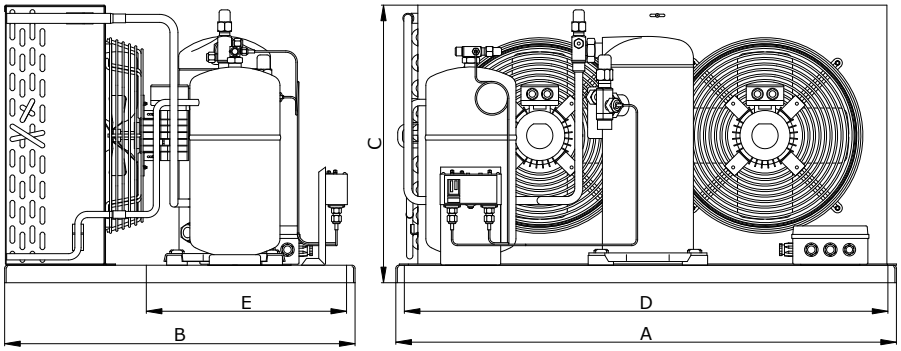

Technical specification

Model	Compressor	Condenser				Receiver	Sound power LWA [dBA]	Sound pressure LPA at 5 m [dBA]
		Type	Air flow [m³/h]	Number of fans	Fan diameter	Volume [dm³]		
JLE-CP-100	DKSJ-10X	18 - 1V	2 500	1	350	3,4	66	44
JLE-CP-150	DKL-15X	18 - 1V	2 500	1	350	3,4	65	43
JLE-CP-200	DLFE-20X	28 - 1V	2 160	1	350	3,4	66	44
JLE-CP-300	DLLE-30X	40 - 2V	2 500	2	300	6,7	66	44
JLE-CP-400	DLSG-40X	64 - 2V	4 100	2	350	6,7	75	53
JLE-CP-500	DLHA-50X	64 - 2V	4 100	2	350	6,7	77	55
JLE-CP-600	D2SK-65X	80 - 2V	4 800	2	400	6,7	78	56
JLE-3SC-750	D3SC-75X	80 - 2V	4 800	2	400	6,7	78	56
JLE-3SS-1000	D3SS-100X	100 - 2V	8 000	2	450	11	80	58
JLE-4SF-1000	D4SF-100X	125 - 2V	7 250	2	450	11	84	62
JLE-4SL-1500.10	D4SL-150X	125 - 2V	7 250	2	450	13	84	62
JLE-4SL-1500	D4SL-150X	200 - 2V	12 850	2	500	13	86	64
JLE-4ST-2000.10	D4ST-200X	200 - 2V	12 850	2	500	13	86	64
JLE-4ST-2000	D4ST-200X	200 - 2V	17 000	2	550	13	85	63
JLE-6SL-2500.10	D6SL-250X	200 - 2V	12 850	2	500	13	92	70
JLE-6SL-2500	D6SL-250X	200 - 2V	17 000	2	550	13	91	69
JLE-6ST-3200	D6ST-320X	200 - 2V	24 000	2	600	24,5	93	71
JLE-8SH-3700	D8SH-370X	250 - 4V	30 000	4	550	24,5	90	68

Electrical data

Model	Compressor				Condenser	
	Voltage	MOC [A]	LRC [A]	Crankcase heater [W]	Voltage	Total current [A]
JLE-CP-100	400V – 3f – 50Hz	2,7	15,5	27	230V – 1f – 50Hz	0,58
JLE-CP-150	400V – 3f – 50Hz	3,4	20,4	27	230V – 1f – 50Hz	0,58
JLE-CP-200	400V – 3f – 50Hz	4,5	37,6	70	230V – 1f – 50Hz	0,58
JLE-CP-300	400V – 3f – 50Hz	7,3	53	70	230V – 1f – 50Hz	0,64
JLE-CP-400	400V – 3f – 50Hz	8,9	68,5	70	230V – 1f – 50Hz	1,16
JLE-CP-500	400V – 3f – 50Hz	10,6	75	70	230V – 1f – 50Hz	1,16
JLE-CP-600	400V – 3f – 50Hz	16,4	85,3	70	230V – 1f – 50Hz	1,46
JLE-3SC-750	400V – 3f – 50Hz	18,7	82	70	230V – 1f – 50Hz	1,46
JLE-3SS-1000	400V – 3f – 50Hz	26,0	109	70	230V – 1f – 50Hz	2,2
JLE-4SF-1000	400V – 3f – 50Hz	26,6	104	100	230V – 1f – 50Hz	2,2
JLE-4SL-1500.10	400V – 3f – 50Hz	35,1	140	100	230V – 1f – 50Hz	2,2
JLE-4SL-1500	400V – 3f – 50Hz	35,1	140	100	400V – 3f – 50Hz	2,1
JLE-4ST-2000.10	400V – 3f – 50Hz	39,6	160	100	400V – 3f – 50Hz	2,1
JLE-4ST-2000	400V – 3f – 50Hz	39,6	160	100	400V – 3f – 50Hz	4,4
JLE-6SL-2500.10	400V – 3f – 50Hz	51,6	192	100	400V – 3f – 50Hz	2,1
JLE-6SL-2500	400V – 3f – 50Hz	51,6	192	100	400V – 3f – 50Hz	4,4
JLE-6ST-3200	400V – 3f – 50Hz	64,9	284	200	400V – 3f – 50Hz	5,8
JLE-8SH-3700	400V – 3f – 50Hz	70,9	309	200	400V – 3f – 50Hz	8,8

MOC [A] = Maximum operation current
LRC [A] = Locked rotor current

Dimensions

Model	Outside dimensions			Fixing dimensions			Connection		Weight [kg]
	A [mm]	B [mm]	C [mm]	D [mm]	E [mm]	Holes	Suction [“/mm]	Liquid [“/mm]	
JLE-CP-100	600	600	455	560	380	4x9	⅝ / 16	⅜ / 10	79
JLE-CP-150	600	600	455	560	380	4x9	⅝ / 16	⅜ / 10	79
JLE-CP-200	600	600	455	560	380	4x9	⅞ / 22	⅜ / 10	110
JLE-CP-300	800	600	442	760	400	4x9	⅞ / 22	½ / 12	115
JLE-CP-400	1 000	700	555	960	400	4x9	1⅛ / 28	½ / 12	121
JLE-CP-500	1 000	700	555	960	400	4x9	1⅛ / 28	½ / 12	155
JLE-CP-600	1 000	700	555	960	400	4x9	1⅛ / 28	½ / 12	151
JLE-3SC-750	1 000	900	585	960	400	4x9	1 ⅜ / 35	½ / 12	271
JLE-3SS-1000	1 200	900	690	1 160	500	4x9	1 ⅜ / 35	½ / 12	279
JLE-4SF-1000	1 200	900	690	1 160	500	4x9	1 ⅝ / 42	½ / 12	375
JLE-4SL-1500.10	1 200	900	690	1 160	500	4x9	1 ⅝ / 42	⅝ / 16	377
JLE-4SL-1500	1 800	1 100	1 170	1 760	700	4x9	1 ⅝ / 42	⅝ / 16	383
JLE-4ST-2000.10	1 800	1 100	1 170	1 760	700	4x9	2 ⅛ / 54	⅝ / 16	470
JLE-4ST-2000	1 800	1 100	1 170	1 760	700	4x9	2 ⅛ / 54	⅝ / 16	472
JLE-6SL-2500.10	1 800	1 100	1 170	1 760	700	4x9	2 ⅛ / 54	⅝ / 16	600
JLE-6SL-2500	1 800	1 100	1 170	1 760	700	4x9	2 ⅛ / 54	⅝ / 16	602
JLE-6ST-3200	1 800	1 100	1 170	1 760	700	4x9	2 ⅛ / 54	⅞ / 22	608
JLE-8SH-3700	1 800	1 100	1 870	1 760	700	4x9	2 ⅝ / 64	⅞ / 22	675

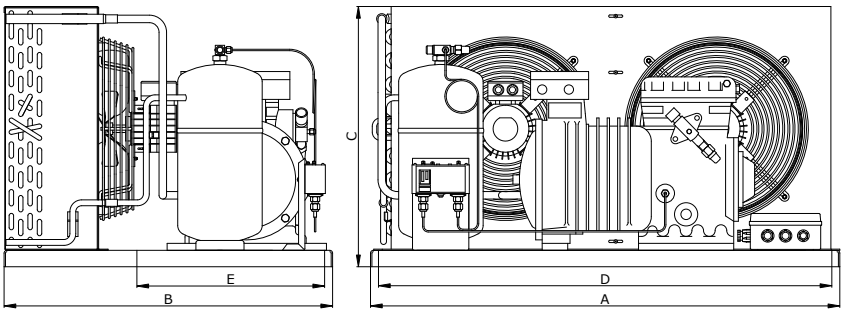

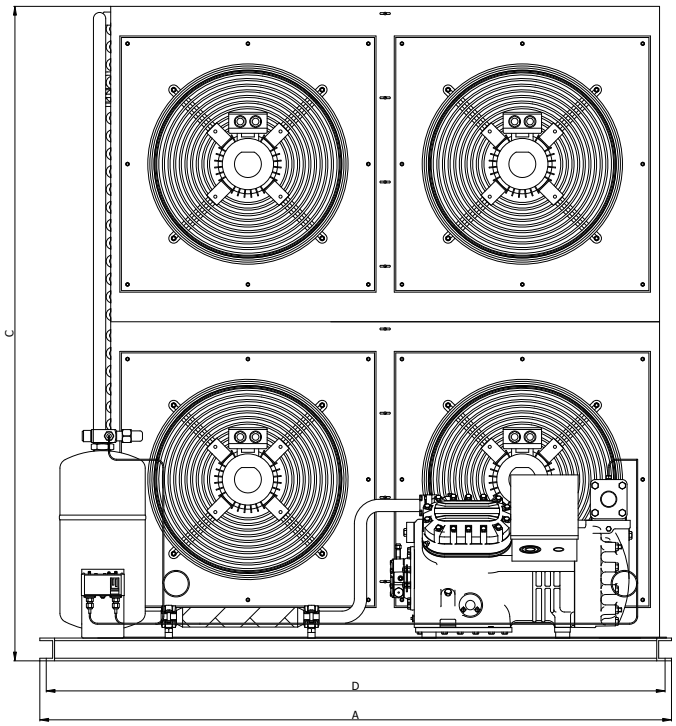

Technical specification

Model	Compressor	Condenser				Receiver	Sound power LWA [dBA]	Sound pressure LPA at 5 m [dBA]
		Type	Air flow [m³/h]	Number of fans	Fan diameter	Volume [dm³]		
JME-3SC-1000.10	D3SC-100X	125 - 2V	7 250	2	450	13	82	60
JME-3SC-1000	D3SC-100X	200 - 2V	12 850	2	500	13	85	63
JME-3SS-1500.10	D3SS-150X	200 - 2V	12 850	2	500	13	85	63
JME-3SS-1500	D3SS-150X	200 - 2V	17 000	2	550	13	84	62
JME-4SA-2000	D4SA-200X	200 - 2V	24 000	2	600	13	86	64
JME-4SH-2500.10	D4SH-250X	200 - 2V	24 000	2	600	24,5	86	64
JME-4SH-2500	D4SH-250X	250 - 4V	30 000	4	550	24,5	86	64
JME-4SJ-3000.10	D4SJ-300X	200 - 2V	24 000	2	600	24,5	86	64
JME-4SJ-3000	D4SJ-300X	250 - 4V	30 000	4	550	24,5	86	64
JME-6SH-3500.10	D6SH-350X	250 - 4V	30 000	4	550	24,5	89	67
JME-6SH-3500	D6SH-350X	250 - 4V	44 000	4	600	24,5	91	69
JME-6SJ-4000	D6SJ-400X	250 - 4V	44 000	4	600	24,5	89	67

Electrical data

Model	Compressor				Condenser	
	Voltage	MOC [A]	LRC [A]	Crankcase heater [W]	Voltage	Total current [A]
JME-3SC-1000.10	400V – 3f – 50Hz	21,6	106	70	230V – 1f – 50Hz	2,2
JME-3SC-1000	400V – 3f – 50Hz	21,6	106	70	400V – 3f – 50Hz	2,1
JME-3SS-1500.10	400V – 3f – 50Hz	30,2	125	70	400V – 3f – 50Hz	2,1
JME-3SS-1500	400V – 3f – 50Hz	30,2	125	70	400V – 3f – 50Hz	4,4
JME-4SA-2000	400V – 3f – 50Hz	30,5	160	100	400V – 3f – 50Hz	5,8
JME-4SH-2500.10	400V – 3f – 50Hz	40,1	192	100	400V – 3f – 50Hz	5,8
JME-4SH-2500	400V – 3f – 50Hz	40,1	192	100	400V – 3f – 50Hz	8,8
JME-4SJ-3000.10	400V – 3f – 50Hz	47,7	218	100	400V – 3f – 50Hz	5,8
JME-4SJ-3000	400V – 3f – 50Hz	47,7	218	100	400V – 3f – 50Hz	8,8
JME-6SH-3500.10	400V – 3f – 50Hz	62,4	284	100	400V – 3f – 50Hz	8,8
JME-6SH-3500	400V – 3f – 50Hz	62,4	284	100	400V – 3f – 50Hz	11,6
JME-6SJ-4000	400V – 3f – 50Hz	71,8	347	200	400V – 3f – 50Hz	11,6

MOC [A] = Maximum operation current
LRC [A] = Locked rotor current

Dimensions

Model	Outside dimensions			Fixing dimensions			Connection		Weight [kg]
	A [mm]	B [mm]	C [mm]	D [mm]	E [mm]	Holes	Suction [“/mm]	Liquid [“/mm]	
JME-3SC-1000.10	1 200	800	680	1 160	500	4x9	1 3/8 / 35	5/8 / 16	300
JME-3SC-1000	1 800	1 100	1 170	1 760	700	4x9	1 3/8 / 35	5/8 / 16	330
JME-3SS-1500.10	1 800	1 100	1 170	1 760	700	4x9	1 5/8 / 42	5/8 / 16	350
JME-3SS-1500	1 800	1 100	1 170	1 760	700	4x9	1 5/8 / 42	5/8 / 16	360
JME-4SA-2000	1 800	1 100	1 170	1 760	700	4x9	1 5/8 / 42	5/8 / 16	464
JME-4SH-2500.10	1 800	1 100	1 170	1 760	700	4x9	2 1/8 / 54	7/8 / 22	520
JME-4SH-2500	1 800	1 100	1 870	1 760	700	4x9	2 1/8 / 54	7/8 / 22	576
JME-4SJ-3000.10	1 800	1 100	1 170	1 760	700	4x9	2 1/8 / 54	7/8 / 22	550
JME-4SJ-3000	1 800	1 100	1 870	1 760	700	4x9	2 1/8 / 54	7/8 / 22	581
JME-6SH-3500.10	1 800	1 100	1 870	1 760	700	4x9	2 1/8 / 54	7/8 / 22	605
JME-6SH-3500	1 800	1 100	1 870	1 760	700	4x9	2 1/8 / 54	7/8 / 22	610
JME-6SJ-4000	1 800	1 100	1 870	1 760	700	4x9	2 1/8 / 54	7/8 / 22	615

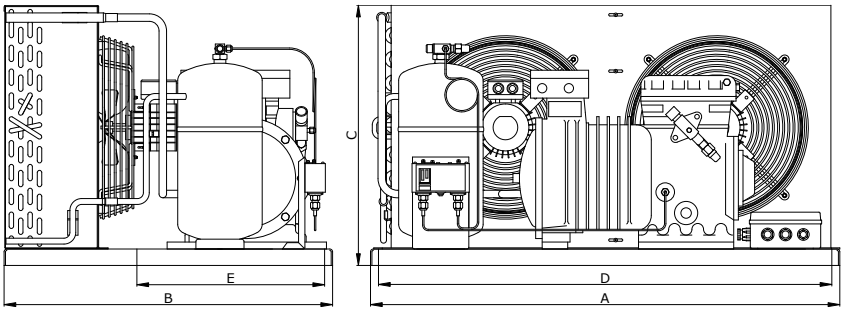

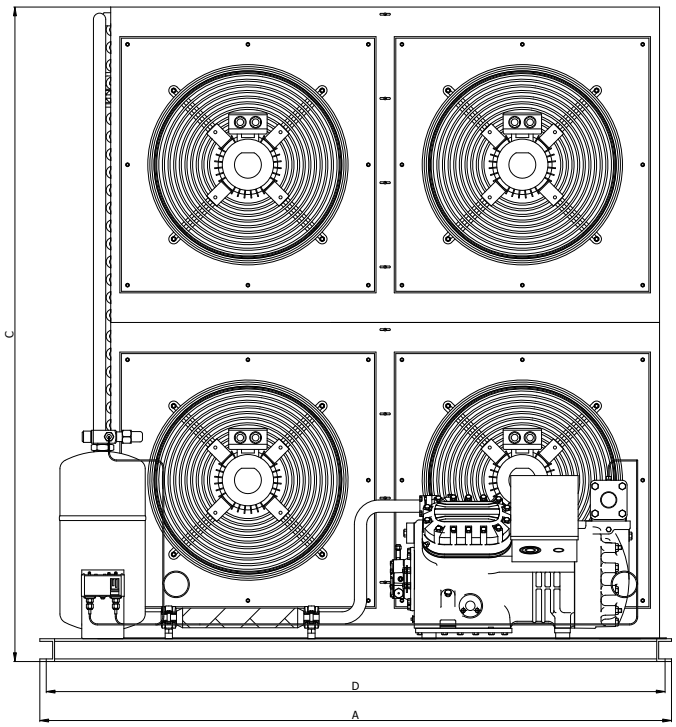

Technical specification

Model	Compressor	Condenser				Receiver	Sound power LWA [dBA]	Sound pressure LPA at 5 m [dBA]
		Type	Air flow [m³/h]	Number of fans	Fan diameter	Volume [dm³]		
JLE-BP-100	2HC-1.2Y	18 - 1V	2 500	1	350	3,4	66	44
JLE-BP-150	2GC-2.2Y	18 - 1V	2 500	1	350	3,4	65	43
JLE-BP-200	2EC-2.2Y	28 - 1V	2 160	1	350	3,4	66	44
JLE-BP-300	2CC-3.2Y	40 - 2V	2 500	2	300	6,7	66	44
JLE-BP-340	2CC-3.2Y	64 - 2V	4 100	2	350	6,7	68	46
JLE-BP-400	4EC-4.2Y	64 - 2V	4 100	2	350	6,7	75	53
JLE-BP-500	4DC-5.2Y	64 - 2V	4 100	2	350	6,7	77	55
JLE-BP-600	4CC-6.2Y	80 - 2V	4 800	2	400	11,0	78	56
JLE-BP-620	4CC-6.2Y	100 - 2V	8 000	2	450	11,0	80	58

Electrical data

Model	Compressor				Condenser	
	Voltage	MOC [A]	LRC [A]	Crankcase heater [W]	Voltage	Total current [A]
JLE-BP-100	400V – 3f – 50Hz	3,5	16,7	60	230V – 1f – 50Hz	0,58
JLE-BP-150	400V – 3f – 50Hz	4,7	22,5	60	230V – 1f – 50Hz	0,58
JLE-BP-200	400V – 3f – 50Hz	5,7	26,0	120	230V – 1f – 50Hz	0,58
JLE-BP-300	400V – 3f – 50Hz	8,5	37,0	120	230V – 1f – 50Hz	0,64
JLE-BP-340	400V – 3f – 50Hz	8,5	37,0	120	230V – 1f – 50Hz	1,16
JLE-BP-400	400V – 3f – 50Hz	10,7	53,2	120	230V – 1f – 50Hz	1,16
JLE-BP-500	400V – 3f – 50Hz	13,5	62,2	120	230V – 1f – 50Hz	1,16
JLE-BP-600	400V – 3f – 50Hz	15,9	62,2	120	230V – 1f – 50Hz	1,46
JLE-BP-620	400V – 3f – 50Hz	15,9	62,2	120	230V – 1f – 50Hz	2,20

MOC [A] = Maximum operation current
LRC [A] = Locked rotor current

Dimensions

Model	Outside dimensions			Fixing dimensions			Connection		Weight [kg]
	A [mm]	B [mm]	C [mm]	D [mm]	E [mm]	Holes	Suction [“/mm]	Liquid [“/mm]	
JLE-BP-100	600	600	455	560	380	4x9	⅝ / 16	⅜ / 10	78
JLE-BP-150	600	600	455	560	380	4x9	⅝ / 16	⅜ / 10	79
JLE-BP-200	600	600	455	560	380	4x9	⅞ / 22	⅜ / 10	110
JLE-BP-300	800	600	442	760	400	4x9	⅞ / 22	½ / 12	115
JLE-BP-340	1 000	700	555	960	400	4x9	⅞ / 22	½ / 12	118
JLE-BP-400	1 000	700	555	960	400	4x9	1⅛ / 28	½ / 12	121
JLE-BP-500	1 000	700	555	960	400	4x9	1⅛ / 28	½ / 12	155
JLE-BP-600	1 000	700	555	960	400	4x9	1⅛ / 28	½ / 12	160
JLE-BP-620	1 200	800	676	1 160	500	4x9	1⅛ / 28	⅝ / 12	174

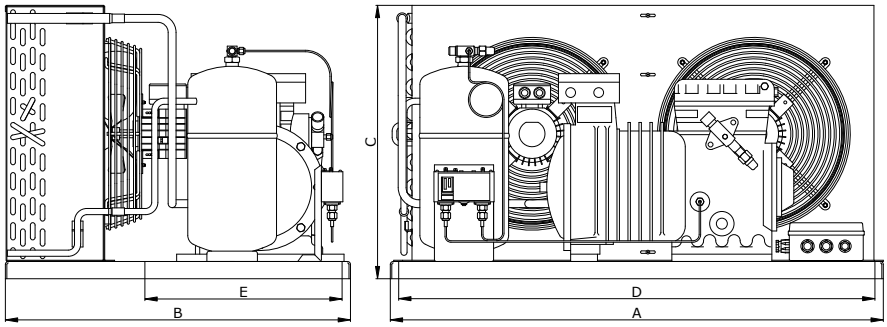

Technical specification

Model	Compressor	Condenser				Receiver	Sound power LWA [dBA]	Sound pressure LPA at 5 m [dBA]
		Type	Air flow [m³/h]	Number of fans	Fan diameter	Volume [dm³]		
JME-ESH-125	ESH725(Y)	KN125-2V	7 250	2	450	11	-	-
JME-ESH-150	ESH730(Y)	KN200-2V	17 000	2	550	13	-	-
JME-ESH-170	ESH736(Y)	KN200-2V	24 000	2	600	13	-	-
JME-ESH-185	ESH743(Y)	KN200-2V	24 000	2	600	13	-	-

Electrical data

Model	Compressor				Condenser	
	Voltage	MOC [A]	LRC [A]	Crankcase heater [W]	Voltage	Total current [A]
JME-ESH-125	400V – 3f – 50Hz	17,0	95	65	230V – 1f – 50Hz	2,2
JME-ESH-150	400V – 3f – 50Hz	20,5	106	65	400V – 3f – 50Hz	4,4
JME-ESH-170	400V – 3f – 50Hz	24,5	135	65	400V – 3f – 50Hz	5,8
JME-ESH-185	400V – 3f – 50Hz	29,5	190	65	400V – 3f – 50Hz	5,8

MOC [A] = Maximum operation current
LRC [A] = Locked rotor current

Dimensions

Model	Outside dimensions			Fixing dimensions			Connection		Weight [kg]
	A [mm]	B [mm]	C [mm]	D [mm]	E [mm]	Holes	Suction [mm]	Liquid [mm]	
JME-ESH-125	1200	800	680	1160	500	4x9	1⅛ / 28	½ / 12	145
JME-ESH-150	1100	1100	1170	1760	700	4x9	1⅛ / 28	⅝ / 16	172
JME-ESH-170	1100	1100	1170	1760	700	4x9	1⅜ / 35	⅝ / 16	177
JME-ESH-185	1100	1100	1170	1760	700	4x9	1⅜ / 35	⅝ / 16	182

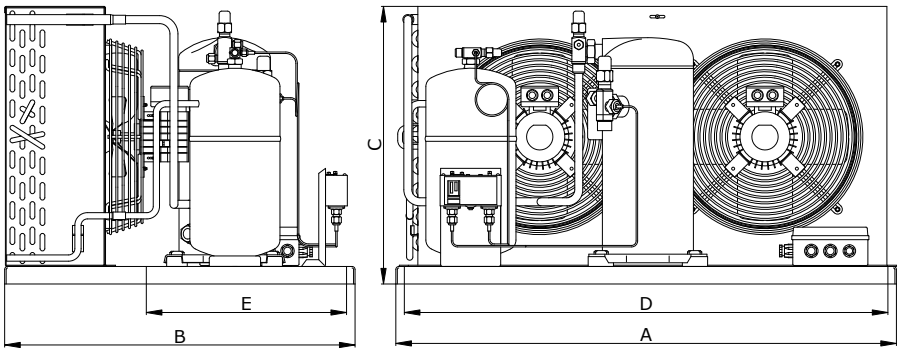

JDK

COOLING TECHNOLOGY SOLUTIONS

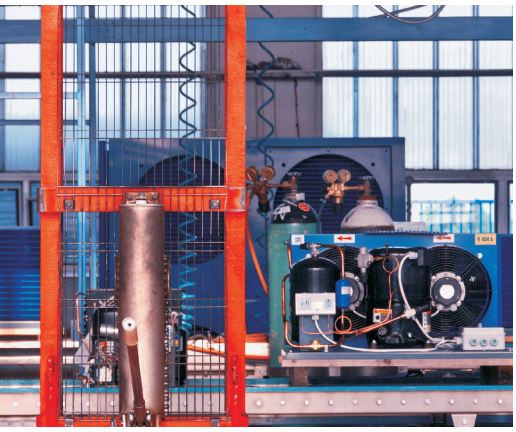

JDK, spol. s r.o.
Pražská 2161
288 02 Nymburk
Czech Republic

Tel.: +420 325 519 111
Fax: +420 325 514 718

JDK Slovakia, spol. s r.o.
Novozámocká 179
949 05 Nitra
Slovak Republic

Tel.: +421 376 514 311
Fax: +421 376 555 858

www.jdk.cz